Unizik Journal of Technology, Production and Mechanical Systems (UJTPMS)

journal homepage: https://journals.unizik.edu.ng/index.php/ujtpms/about
PRINT ISSN: 1115-7143 || ONLINE ISSN: 1115-7453

Design and production of bitter leaf washing machine for small and medium scale bitter leaf processing

Okolie P. C.[1*], Ezenwa O. N.[1], Nnakwo K. C.[2], Wogu S. N.[3]

[1]Deparment of Mechanical Engineering, Nnamdi Azikiwe University, Awka, P.M.B 5025, Nigeria
[2]Department of Metallurgical and Materials Engineering, Nnamdi Azikwe University, Awka, P.M.B %025, Nigeria.
[3]Department of Automobile/Metalwork Technology, Abia State College of Education Technical, Arochukwu, Abia, Nigeria.

ARTICLE INFO

Article history:
Received Jun 17, 2024
Revised Jul 10, 2024
Accepted Jul 12, 2024

Available online Jul 12, 2024

Keywords:
Bitter leaf, washing machine, throughput efficiency, even efficiency, bitter taste level

ABSTRACT

Bitter leaf has been proven to be one of the most sort after edible leaves, especially within the sub-Sahara Africa due to its medicinal values. However the process of removing the bitter taste before use is tasking. This work was geared towards addressing this challenges. The work designed and produced a bitter leaf washing machine for small and medium scale bitter leaf processing. The machine consist majorly of the washing chamber, washing drum and an electric motor. The machine was powered with 1.5 hp electric motor. The machine has the capacity of 23kg/hour and 18kg/hour, for washing fresh and shredded bitter leaves respectively. It also has a throughput capacities of 80.6 % and 82.6 % for fresh and shredded bitter leaves respectively. The washing process reduced the bitter leaves to an average sizes of 40 – 50 mm. Hence, it is recommended that leaves be allowed to shred after plucking before washing. The throughput and even efficiencies obtained shows that there lesser loss of materials while washing shredded bitter leaves, compared to washing fresh leaves. The machine was produced with locally sourced materials, thereby making it cost effective. The machine is therefore recommended for small and medium scale bitter leaf processing.

1. Introduction

Bitter leaf is a tiny shrub that is scientifically known as Vernonia Amygdalina [1]. It grows in tropical Africa mostly along water ways, in grassland and at the edges of forests. Bitter leaf belongs to the daisy family, and can grow as high as 2 to 5 meters. The leaves are elliptical in shape and can reach a length of up to 20 cm. Bitter leaf extracts, stems, and barks are used for culinary, medical, and curative purposes [2]. But in most African countries, the leaves are used as a staple vegetable for making soups and stews. It can also be blended like smoothies or pound in a mortar and the juice squeezed out for drinking [3].

Bitter leaf as the name implies is very bitter. It is conventionally prepared by washing the leaves severally in order to remove or reduce its bitterness taste before it can be used for making either soup or stew. This is achieved by using human hands to continuously rub, squeeze and knead the bitter leaf with lots of water [4]. The process is very tedious, time consuming and waste a lot of water. This has led some researchers into carrying various research on the process of removing the bitter taste of bitter leaf before use, or extracting the bitter juice for other purposes. This has resulted to the design of various machines and processes for washing of bitter leaf and extraction of bitter leaf juice.

**Corresponding author:pc.Okolie@unizik.edu.ng*

Machines of different designs have been developed for the purpose of processing bitter leaf, either for juice extraction, or for the purpose of washing in order to remove the bitter taste. Ololade et al, [5], designed and produced a small scale motorized bitter leaf juice extractor. The machine was powered by a 0.33 hp electric motor; and has the capacity of 35.4 g/min. The reported efficiency of the machine is 97.1%. Orhorhoro et al, [6], developed a similar machine, powered with an electric motor. It uses stainless steel beaters inclined to angle to wash and squeeze the leaves against the cylindrical hopper incorporated with a perforated plate that drained juice while expelling the pulp. The machine has a power of 0.7hp and handles a washing volume of 0.0127m^3. The machine washes 407g of bitter leaf within 6.7 minutes. The efficiency of the machine and the machine throughput capacity were obtained as 55.00 % and 1.032 g/sec respectively. Agbo [7] developed a manually-operated bitter leaf processing equipment for straining, tearing and washing off the bitter content of bitter leaf. The machine comprised of the hopper, the crank mechanism, the digester chamber and the support frame. The machine takes an average of 5 minutes to fully process a batch of 0.4 kg of bitter leaf. The equipment processes bitter leaf into the acceptable mixture sizes of between 5 – 40 mm at a rate up to ten times faster, compared to the hand method. Also, Tangka et al [8] developed a bitter leaf washing machine powered by a 3 kW electric motor. It is made up of three sections such as chopping, washing and the spinning section. The test conducted with the machine showed the capacity and the efficiency of the various sections of the machine. The chopping section has a capacity of 300 kg/hour while reducing the vernonia leaves to 2·64 mm mean size. While the washing and the spinning sections have the capacity of 60 kg/hour and 150kg/hour respectively.

It was also observed from the literature that some reported design for bitter leaf washing machine were automated. This is seen in the work reported by Uguru-Okorie et al [9]. He developed an automated bitter leaf washing machine. The machine is timing-based and comprises of the following components: water heater (500W), electric blender (200W), microcontroller(ATmega8A), MOC3021 optocoupler, BT151-500R thyristor, relay module 12v, Tact button switch, Solenoid valve, I2C LCD interface, voltage regulator L7805CV, MOSFET (IRFZ44 55V 49A), etc. The machine achieved a maximum removal of the bitterness of the leaf at 5 min spinning time for 0.025 kg of bitter leaf.

The various developed machines all followed the same principle of kneading and squeezing. This has led to the breakage or shredding of the leaves thereby reducing the quantity of the leave recovered after washing. This work is geared towards design and fabrication of bitter leaf washing machine using locally sourced material that will reduce the shredding of the leaves after washing.

2. Materials and Methods

The bitter leaf washing machine developed in this work was modeled using Solidworks software, version 10. It comprised of different components, such as prime mover, washing drum, washing chamber and the supporting frame. The components were first drawn in parts, and then assembled by mating the parts. The materials and colour used for the machine was selected from the Solidworks' vast library and applied to the parts. The machine was designed based on the following considerations;

Light weight machine with ease of operation

i. Cost effectiveness
ii. Volume of bitter leaf to be washed per batch.
iii. Low power consumption.
iv. Factor of safety of 4

2.1 Mathematical Design

2.1.1 Washing Chamber

The volume of the washing chamber (V_W) was determine inconsideration with the volume of the washing drum (V_D), volume of the bitter leaf to be washed (V_B), and the volume of the free space (V_S). Mathematically, that is to say that the volume of the washing chamber (V_W) is given by;

$$V_W = V_B + V_D + V_S \quad (1)$$

Since the washing chamber was designed to be in a cylindrical form, therefore the volume of the washing chamber can also be given as;

$$V_W = \pi R^2 L \quad (2)$$

Where R and L is the radius and length of the washing chamber.

V_B = 0.008 m^3, considered as the volume of the bitter leaf to be washed per batch, since the machine is designed for small and medium scale processing. While V_S is the 20% of V_B ($V_S = 0.2V_B$) in order to allow for the warbling of the bitter leaf during washing operation. And since the washing drum is of cylindrical form, therefore the volume of the washing drum is given as;

$$V_D = \pi r^2 l \quad (3)$$

Where r is the radius of the washing drum cylinder and L is the length of the drum. Since the machine is required for small and medium scale processing, small values of r and L were considered and chosen for the purpose of portability. Therefore substituting equation (2) and (3) into equation (1) gives;

$$\pi R^2 L = 1.2V_B + \pi r^2 l \quad (4)$$

Where L is slightly greater than l to prevent the washing drum from rubbing on the washing chamber during rotation. Hence L is considered to be equal to 1.85 l (L = 1.85 l). Therefore the radius of the washing chamber that will give the required volume of the washing chamber will be obtained from equation (3) and given as;

$$R = \sqrt{\left(\frac{1.2V_B + \pi r^2 l}{1.85\pi l}\right)} \quad (5)$$

2.1.2 Pulley and Belt Arrangement

The pulley and belt arrangements were used to transmit power from the prime mover to the washing drum. It was also used to reduce rotational speed of the motor to a convenient speed required for the washing of the bitter leaves to avoid mashing instead of washing.

The normal speeds for available motors in the market is around 1500 rpm. In order to reduce the speed to the required speed using pulleys, equation (6) was applied in order to determine the diameter of the pulleys that will reduce the speed to the required speed.

$$\frac{N_1}{N_2} = \frac{D_2}{D_1} \quad (6)$$

Where N_1 and N_2 are the speed of the driving and driven pulleys respectively, while D_1 and D_2 are the diameters of the driving and driven pulleys respectively.

The length of the belt (L_B) that is required to connect the pulleys is given by Khurmi and Gupta [10] as;

$$L_B = \pi(r_b + r_s) + 2x + \frac{(r_b - r_s)^2}{x} \quad (7)$$

Where r_b and r_s are the radius of the big and small pulleys respectively, while x is the center to center distance between the two pulleys.

2.1.3 Power Required for the Prime Mover

The prime mover is required to turn the washing drum. In this case, an electric motor was designed to power the machine. The required power (P) for the motor is given by;

$$P = \tau\omega = \frac{2\pi N_2 \tau}{60} \quad (8)$$

Where τ is the torque is required to turn the shaft, and ω is the angular velocity of the shaft. The torque τ is given by;

$$\tau = F \cdot l \cdot sin\theta \quad (9)$$

Where l is the length of the shaft, which in this case is the length of the washing drum, and F is the total force on the shaft and is given by;

$$F = (m_s + m_b)g + T \quad (10)$$

Where m_s and m_b are the masses of shaft and the bitter leaves loaded in the washing chamber. g is gravitational force and T is tension on the belt for maximum power transmission. Therefore, for maximum power transmission;

$$T = 3T_C \quad (11)$$

Where T_C is the centrifugal tension on the belt, and it is given by;

$$T_C = mv^2 \quad (12)$$

Where m is the mass of the belt per unit length, and v is the velocity of the belt.

2.2 Material Selection and fabrication

The materials for the production of the machine were sourced from locally available material in order to reduce the cost of the machine. The materials were selected based on the design calculations. Stainless steel was selected for the washing chamber and washing drum, in order to prevent corrosion and contamination of the bitter leaf after washing.

The frame was fabricated with 2 inch angle iron of 4 mm thickness. The washing chamber is of cylindrical form, and was fabricated 10 inches diameter galvanized pipe of 3 mm thickness. The washing drum was fabricated with 4 inch diameter galvanized pipe of almost the same length as that of washing chamber. The pipe was padded with teflon material with rough surface which helps to rub the leaves without mashing them. The washing drum was also attached with a strip of thick and strong rubber material along the length of the drum which helps to scoop the leaves as the drum rotates to ensure even washing of the bitter leaves. The washing drum has a shaft at both ends which helps to suspend the drum within the washing chamber with the help of bearing. These bearing help to ensure free rotation of the drum. The shaft of the washing drum is then connected to the

electric motor with the help of pulleys and belt. The electric motor rotates drum thereby causing washing action within the washing chamber. The machine was powered with 1.5 hp electric motor according to the design specification.

The fabrication process was carried out, in accordance with standard fabrication process, which entails marking and cutting of the acquired materials to the required shape and size, drilling of required holes to the specified dimensions, joining of the cut out materials by welding to obtain the desired components, surfacing finishing of the produced component by grinding of excess weld deposit, filling of the edges for smoothness, sandpapering of the surfaces to remove rust and impurities, and spray painting to prevent rust and improve aesthetics, and assembling of the produced component with bolts and nuts according to the production drawing.

Finally the production costing were carried out, by itemizing the unit cost of each materials used for the work, including the consumables such as electrodes and cutting and filling disc, sandpapers and so on, as well as cost for labour, to ascertain the cost effectiveness of the local production.

2.3 Performance Evaluation

The produced machine was tested to ascertain its performance during operation. A known weight of fresh bitter leaves were fed into the machine with a varying volume of water. The machine was powered on, and allowed to run at different time interval from 1 min to 10 mins. At the end of each washing operation, the bitter leaves were collected, and allowed to drain completely. The bitter leaf were then sorted and weighed. This processes were also repeated for bitter leaves that were allowed for some hours to shred after collection. The obtained data was used to determine the following performances;

i. Machine Capacity (C): This is the ratio of the weight of bitter leaves washed (W_{wb}), to the time taken for the washing process (t). This is given in equation (13), as;

$$C = \frac{W_{wb}}{t} \quad (13)$$

ii. Throughput Efficiency (ϵ_T): This determined as the ratio of the weight of bitter leaves collected after washing (W_{wb}) to the weight of the bitter leaves fed into the machine before washing (W_{fb}), as given in equation (14);

$$\epsilon_T = \frac{W_{wb}}{W_{fb}} \times 100 \quad (14)$$

iii. Even Efficiency (ϵ_E): This is the ratio of the weight of the even bitter leaves after washing (W_{eb}) to the weight of the bitter leaves after washing (W_{fb}), as described in equation (15);

$$\epsilon_E = \frac{W_{eb}}{W_{fb}} \times 100 \quad (15)$$

3. Results and Discussion

3.1 Modeled Bitter Leaf washing Machine

The newly developed bitter leaf washing machine was modeled with solidworks software and presented in figure 1(a). The machine consist majorly of the washing chamber, washing drum, and electric motor as shown in figure 1(b), (c), and (d) respectively.



(a)

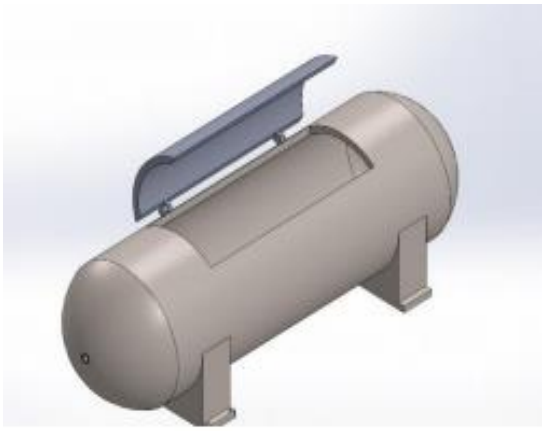

(b)



(c) (d)

Figure 1: (a) The modeled graphics of the bitter leaf washing machine and its component: (b) washing chamber, (c) washing drum, and (d) electric motor

The bitter leaves are fed into the washing chamber, where the washing process takes place. The washing drum rotates by the help an electric motor which drives the drum by the help of pulley and belt arrangement. As the drum rotates, it squeezes the bitter leaves against each other and to the walls of the washing chamber, thereby extracting the bitter juice that makes the leaf bitter. After the washing process, the water and the extracted juice are discharged through the discharge dot and the washed bitter leaves left inside the washing chamber for collection.

3.2 Performance Analysis

The result of the performance evaluation carried out on the produced bitter leaf machine is presented in table 1. The test was carried with fresh bitter leaves, as well as with shredded bitter leaves. The column labeled BT represent the bitter taste level of the bitter leaves after washing. The number 1 to 3 was assigned to taste levels in the order of very bitter, slightly bitter, and no bitter taste. For each of the test, 3kg of bitter leaves were fed into the machine with constant amount of water added to the machine. The volume of water used for the washing was 5 liter of water and kept constant for all the washing processes. The weight recorded after the washing was used to generate the data in table 1, using the equation (13), (14), and (15) for the machine capacity (C) in kg/min, throughput efficiency (ϵ_T) expressed in percentage and even efficiency expressed in percentage respectively.

Table 1: Test performance evaluation result.

t (mins)	W_{fb} (Kg)	C Kg/ min	Fresh Bitter Leaves					Shredded Bitter Leaves				
			W_{wb} (Kg)	W_{eb} (Kg)	ϵ_T (%)	ϵ_E (%)	BT	W_{wb} (Kg)	W_{eb} (Kg)	ϵ_T (%)	ϵ_E (%)	BT
2	3	1.5	2.51	2.25	83.7	89.6	1	2.58	2.38	86.0	92.2	1
4	3	0.75	2.50	2.25	83.3	89.6	2	2.57	2.36	85.6	91.8	1
6	3	0.50	2.50	2.18	83.3	87.2	2	2.56	2.34	85.3	91.4	2
8	3	0.38	2.42	2.10	80.6	86.8	3	2.49	2.25	83.0	90.4	2
10	3	0.3	2.41	1.89	80.3	78.4	3	2.48	2.20	82.6	88.7	3
12	3	0.25	2.38	1.86	79.3	78.2	3	2.45	2.13	81.6	86.9	3

3.2.1 Bitter Taste Removal

The time it took to remove the bitter taste from the bitter during washing was plotted as shown in figure 2, for both Fresh Bitter Leaves (FBL) and Shredded Bitter Leaves (SBL) as indicated with blue and red plot respectively. From the figure it was seen that it took shorter time to wash FBL compared to SBL. The bitter taste level of 3, which signifies no bitter taste was achieve at 8mins and 10 mins washing time for FBL and SBL. This shows that for faster removal of the bitter taste from the bitter leaves, the leaves should be washed immediately after plucking.

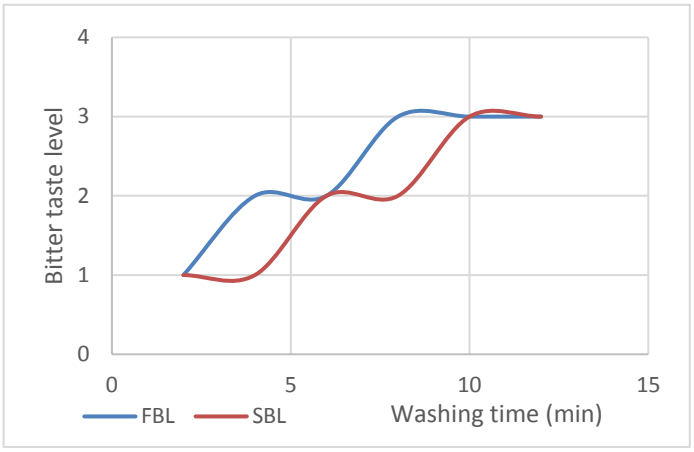

Figure 2: Graph of bitter taste level against the washing time

3.2.2 Machine Capacity

The capacity of the machine was obtained after the test evaluation using equation (13). The result was plotted with the bitter taste level after washing in other to determine the capacity that will properly wash the bitter leaves. From the graph in figure 3, it could be seen that for fresh bitter leaves, that no bitter taste was observed at 0.38kg/min while for shredded bitter leaves, the no bitter taste level appeared in 0.3 Kg/min. This shows that the machine has a varying capacities for the different conditions of bitter leaves. This values shows that the machine can wash 23kg of fresh bitter leaves per hour and 18kg of shredded bitter leaves per hour. This implies that fresh bitter leaves washes faster than the shredded biter leaves. This shows that the developed machine has a higher capacity compared to that reported by Ololade et al, [5], Orhorhoro et al [6] and Agbo [7] which has a capacity of 2.12 kg/hour, 3.6 kg/hour, and 4.8kg/hour respectively. However the design reported by Tangka et al [8] has a higher capacity of 160 kg/hour compared to the design reported in this work. This can be attributed to the capacity of the electric motor used for the various design.

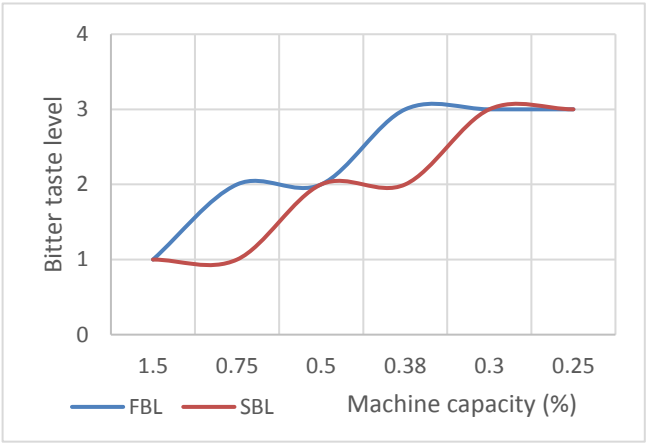

Figure 3: Graph of the bitter taste level against the machine capacity

3.2.3 Throughput Efficiency

The throughput efficiency for all the washing conditions were calculated using equation (14) and the result presented in table 1. This results were plotted as shown in figure 3, in other to determine the actual throughput efficiency of the machine for both conditions of the bitter leaves. From figure 4(a), it was seen that the no bitter taste level was observed at throughput efficiency of 80.6% for fresh bitter leaves, while in figure 4(b) it was observed at 82.6% for shredded bitter leaves. This implies that more bitter leaf materials were lost when washing fresh bitter leaves compared to when the shredded bitter leaves were washed. This could be because of the tenderness of the bitter leaves when they are fresh. Therefore during the washing process, the leaves may have been ripped off and discharged with the waste water, hence the reason for lower through put efficiency seen with the fresh bitter leaf processing. The throughput efficiency obtained in this work is higher than the once obtained from the works of Ololade et al, [5] and Orhorhoro et al, [6]. This is due to the loss of the leaves material after washing. This is caused by excessive rip of the leaves materials into smaller particles, which are then lost during waste water removal after washing. This in turn reduces the quantity of materials recovered after washing.

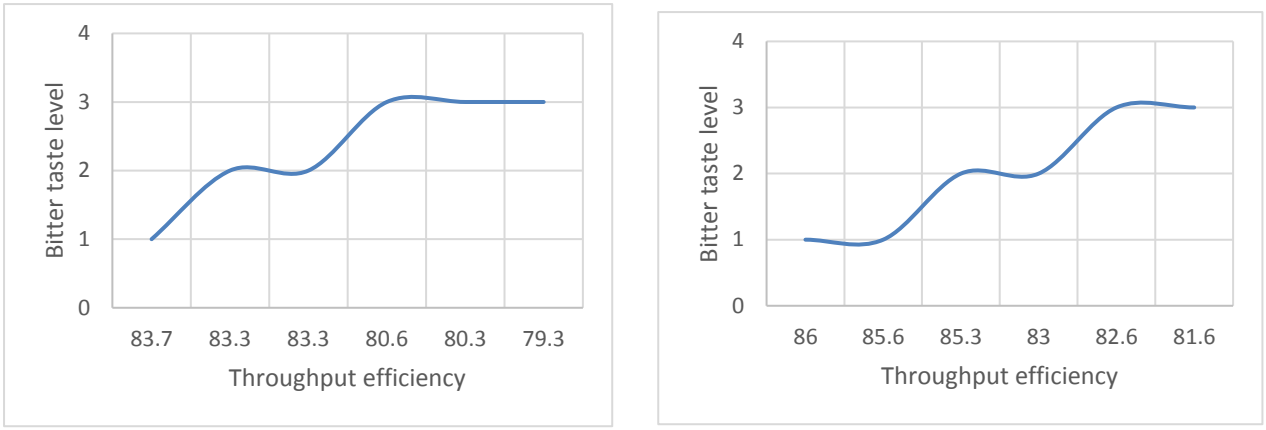

(a) (b)

Figure 4: Graph of bitter taste level against the machine throughput efficiency for (a) fresh bitter leaf and (b) shredded bitter leaf.

3.2.4 Even Efficiency

The graph of bitter taste level against even efficiency for both conditions of bitter leaf washing are shown in figure 4. This is necessary in other to ascertain the level of mashing done on the bitter leaves during the washing process. It can be seen from figure 5(a) that the even efficiency 86.8% was recorded at no bitter taste level for fresh bitter leaves while 88.7% was recorded for shredded bitter leaves as seen in figure 5(b). This showed that the fresh bitter experienced more mashing than the shredded bitter due to the tenderness of the fresh leaves. This is possibly the reason why the leaves are allowed to shred before washing during conventional washing process to prevent so much ripping of the leaves during washing. The washing process reduced the bitter leaves to an average size of 40 to 50 mm which was higher compared to the sized obtained from the works of Tangka et al, [8] and Agbo [7], which reported average sizes of 2.64 mm and 5-40 mm. This shows that developed machine has a lesser mashing effect compared to the available machines that reported by Tangka et al, [8] and Agbo [7]. However, most of the available literature did not report the mashing effect of their design.

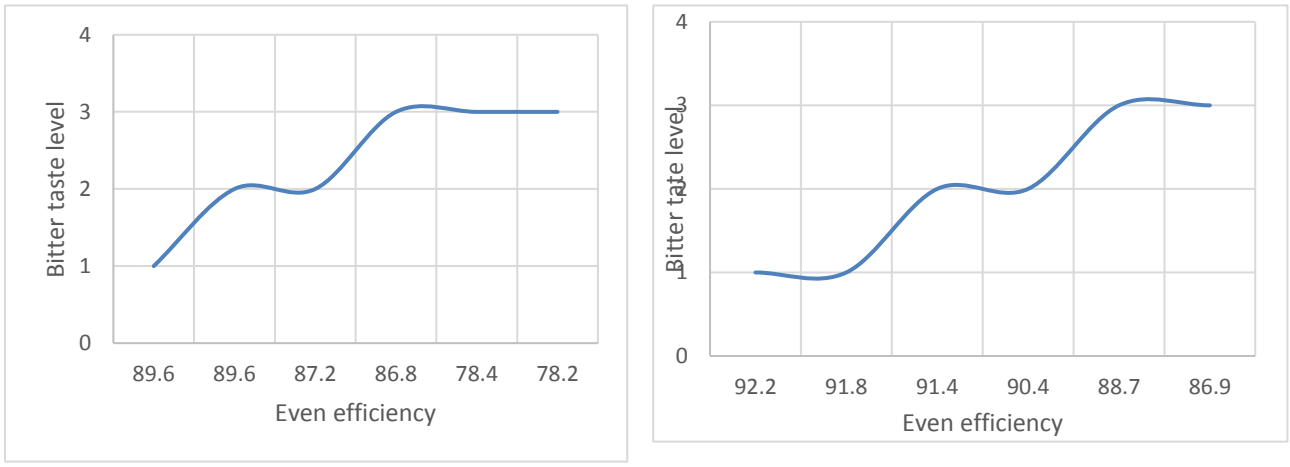

(a) (b)

Figure 5: Graph of bitter taste level against the even efficiency for (a) fresh bitter leaf and (b) shredded bitter leaf.

4.0 Conclusion

The bitter leaf washing machine developed in this work was designed for small and medium scale bitter leaf processing. The machine was produced with locally sourced material in other to make it affordable for peasant farmers. More so, the machine is user friendly and easy to maintain. The test performance shows that the machine has a higher capacity in washing fresh bitter compared to shredded ones just as it is been practiced with the conventional washing method. The recorded capacities were 23kg/hour and 18kg/hour for FBL and SBL respectively. However it was observed that there was higher loss of the leaves material while washing FBL compared to SBL. This was seen in the throughput capacities of the machine for both conditions of the bitter leaves. The machine gave a throughput capacities of 80.6 % and 82.6% for FBL and SBL respectively. This is because the shredded leaves tends to be much stronger than the fresh leaves. This can also be seen in the even efficiencies obtained from both conditions of the bitter leaves. Therefore in other to have lesser loss of the leaf materials, it is recommended that leaves be allowed to shred before being washed with this machine.

Acknowledgement

The authors acknowledged Tertiary Education Trust Fund (TETFund) of Nigeria, for sponsoring this research work. The authors also appreciated the Management and TETFund Committee of Nnamdi Azikiwe University, Awka Nigeria, for nominating this work for sponsorship.

References

[1] Kadir, Oseni, Olawoye, Babatunde. Vernonia amygdalina: an underutilized vegetable with nutraceutical potentials – a review. Turkish Journal of Agriculture - Food Science and Technology. 2016; 4(9):763-768

[2] Ogwu M. C., Ikhajiagbe B. Vernonia amygdalina Delile (Asteraceae): An Overview of the Phytochemical Constituents, Nutritional Characteristics, and Ethnomedicinal Values for Sustainability. Herbal Medicine Phytochemistry. Springer, Cham. 2024; https://doi.org/10.1007/978-3-031-21973-3_75-1

[3] Fawwaz Muammar, Pratama Mamat, Latu Saparuddin, Rahayu Rita, Nurkamilah Andi. The Potential of Bitter Leaf (Vernonia amygdalina) in Herbal Medicine as Anti-Inflammatory Agent. Industria Jurnal Teknologi dan Manajemen Agroindustri 2023; 12(1): 36-44.

[4] Dandi Samuel Opoku, Abarike Emmanuel Delwin, Ampofo-Yeboah Akwasi. Bitter Leaf Vernonia amygdalina Extract Enhances Growth, Hematology, Heat Stress Response, and Resistance to Aeromonas hydrophila in Nile Tilapia. North American Journal of Aquaculture. 2022; 84(4): pp432-441

[5] Ololade Moses Olatunji, Divine Favour Amadi, Kingsley Charles Uman. Design and construction of a small-scale motorized bitter leaf juice extractor. Agricultural Extension Journal. 2018; 2(3): pp151-157.

[6] Orhorhoro Ejiroghene Kelly, Ebomwonyi Patrick, Ebunilo Patrick Okechukwu. Development of a modular bitter leaf washing and juice extraction machine. Usak University Journal of Engineering Sciences. 2022; 5(1): 55-67.

[7] Agbo Cornelius, Ogbodo Anayo. Design and fabrication of a dietary bitter leaf processing machine. Indian Journal of Engineering. 2022; 19(52): 415-424

[8] Tangka, J. K., Penda, P. M. Development and Performance Evaluation of a Medium-scale System for Processing Bitter Leaf. Biosystems Engineering. 2007; 96(2): 223–229.

[9] Uguru-Okorie D.C., Adebimpe A.M., Oni T.O., Omoyemi P. Development of an automated bitter leaf processing machine. Scientific African. 2022; Volume 17, e01311, ISSN: 2468-2276.

[10] Khurmi R. S., and Gupta J. K. Machine Design. New Delhi: Eurasia Publishing House. 2008; 14th edition.