JEAS

Journal of Engineering and Applied Sciences 3 (2007) 76 - 86

JOURNAL OF ENGINEERING AND

Optimum insulation models for one dimensional steady state heating

C.C. Ihueze

Department of Industrial and Production Engineering, Nnamdi Azikiwe University, Awka

Abstract

Theoretical analysis of parameters related to the critical and optimum insulation models were carried out. Analytical and computational models were developed for one-dimensional steady state heat transfer units to be used in industries. Finite horizontal air plate element is idealized for the heating section and basic heat transfer analysis is applied in the rectangular and radial heating units. Critical and optimum insulation thicknesses were modeled for plane walls and radial systems. Graphics analysis showed the hyperbolic response of insulation thickness with heat loss and the infinite heat loss as the insulation decreased. The critical and optimum models developed for plane walls and cylinders show critical insulation thickness of heat transfer surfaces as a function of the convective heat transfer coefficient of fluid surrounding the external walls of insulation (ambient air) and the thermal conductivity of insulating material. While the optimum insulation thickness is a function of thermal conductivity of insulating material, the convective heat transfer coefficient of out side air as well as the thermal gradient ratio, dependent on the temperature difference between the walls of the insulation and the temperature gradient between the outer walls of insulation and the external air. Insulation models were developed for fiberglass and asbestos and the predictions of the models compared favourably with analytically derived data.

Keywords: Optimum insulation; Critical insulation; Steady state; Transient state insulation and model

1. Introduction

Heat insulation applying to any coating of heat-delivery surface such as found in the inner surfaces of drying chambers, interior surface of baking ovens, furnaces, heat exchangers, cold rooms interior surfaces etc., constitute basic engineering problems. The need to economize heat energy losses in thermal structures for optimum performance of structure calls for a great attention. Heat insulation ensures minimal losses of heat energy generated for useful purposes (Erokhin et al., 1986) reported that any material whose thermal conductivity is less than 0.2W/(m.k) could be used as insulating material. Though (Holman,2004), (Erokhin,1986) and (Rajput, 2004) expressed the relation for the computation of critical insulation thickness of thermal structures in terms of convective heat transfer coefficient of ambient air and the thermal conductivity of insulating material, the issue of optimum insulation thickness has not been addressed. The optimum insulation model is expected to consider not only the convective heat transfer coefficient and the thickness of the insulating material but also the similarity criteria for predicting convective heat transfer coefficient of the heating air as film coefficient.

1.1. Factors influencing insulation models

The factors influencing insulation thickness can be identified with film coefficients (convective heat transfer coefficients of heating and cooling fluid) that are influenced by the physical properties of the fluids**,** quantity of heat transferred and geometry of heat transfer medium (Hollands et al., 1975).

1.1.1. Film coefficients are the convective heat transfer coefficient of the heating and cooling fluids that are affected by the physical properties of the cooling and heating fluids. Such physical properties include thermal conductivity of fluids, viscosity of the fluids, specific heat, capacity of fluids, density of the fluids, coefficient of thermal

expansion, temperature difference between surface and fluid, gravitational acceleration. The film coefficient increases as the film temperature increases.

1.1.2. Quantity of heat transferred: This is greatly influenced by the film properties such as film coefficient, film thermal conductivity, temperature, density etc. As the quantity of heat transfer increases with film temperature, the insulation thickness increases with increasing heat transfer.

1.1.3. Geometry of heat transfer medium: The film coefficient in enclosed space increases as the characteristic length increases there by increasing the quantity of heat transfer. Also the increase in heat transfer surface increases the quantity of heat transfer. Increasing surface area and characteristic length means increasing insulation. Above all it is the physical properties of fluid film that determines the insulation. Analytical and computational models are developed for one-dimensional steady state heat transfer units to be used in industries.

2. Theoretical analysis

This section discusses the parameters related to insulation as well as existing insulating models.

2.1. Critical insulation model

The classical critical insulating models for radial surfaces is expressed in (Erokhin et al., 1986; Holman, 2004; Rajput, 2004; Eugene and Theodore, 1996) as

$$r_0 = k_i/h_0 \quad (1)$$

where
r_0 = outside radius of insulation**,** k = thermal conductivity of insulating material, h_0= convective heat transfer coefficient of ambient air usually taken as $3W/m^2k$ for heat flowing horizontal (Hollands et al., 1975).Critical insulation thickness is the thickness of insulation up to which heat flow increases and after which heat flow decreases. The addition of insulation always increases the conductive thermal resistance, which will normally decrease the heat flow.

2.2. Convective heat transfer coefficient in enclosed space

The Grashof Number, Nuselt Number and the Prandtl numbers are important film parameters in the estimation of the convective heat transfer coefficient of enclosed air expressed classically as

$$Nu = h_l/k_f \quad (2)$$

The idealized horizontal air plate element in enclosed space is represented in Fig. 1. for this analysis

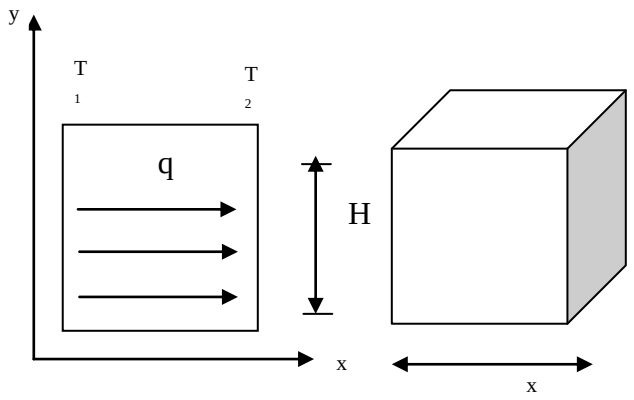

Fig. 1. Idealized horizontal air plate element as convective environment.

Heat flow is assumed horizontal here. Before analysis of dynamic properties or the convective heat transfer coefficient of heating or cooling agent it is necessary to establish whether flow is laminar or turbulent. The parameter that is usually used in heat transfer is the Reynolds number or Raleigh number.
For the figure above the film temperature is expressed as

$$T_f = \frac{T_1 + T_2}{2} \quad (3)$$

Nu_f = Average medium Nuselt Number at film temperature
Gr_f = Grashof number expressed by (MacGregor and Emery, 1969) as

$$Grf = \frac{gB(T_1 - T_2)L^3}{v_f^{\,2}} \quad (4)$$

where, g = acceleration due to gravity, m/s^2, B = coefficient of cubic expansion of gas expressed as

$$B = 1/T_f,\ K^{-1} \quad (5)$$

T_1,T_2 = up stream and down stream temperatures of fluid
L = characteristic length, V_f = kinematic viscosity, m^2/s, Pr_f = prandtl number expressed as

$$Pr_f = \nu_f/\alpha_f \quad (6)$$

α_f = thermal diffusivity of the heat transfer agent expressed as $F = k_f / c_{pf}\ \rho_f$, K_f = thermal conductivity of heat transfer gent, c_{pf} = specific heat capacity of heat transfer agent at constant pressure, ρ_f = density of heat transfer agent.

2.3. Raleigh number

Flow is laminar if $10^4 < 10^9 <$ Ra and turbulent if Ra > 10^9 in free convection flow. The quantity (G_{rf} P_{rf}) is called

the Raleigh number and it establishes whether flow is laminar or turbulent. It can be expressed as

$$Ra = G_{rf} P_{rf} \quad (7)$$

At very low Grashof numbers there are very minute free-convection current and the heat transfer occurs mainly by conduction. As the Grashof number is increased, different flow regimes are encountered (Holman, 2004). (Evans and Stefany, 1965) had shown that transient natural convection heating and cooling in enclosed vertical or horizontal cylindrical enclosures may be calculated with

$$Nu_f = 0.55 (Gr_f Pr_f)^{1/4} \quad (8)$$

Experimental results for free convection in enclosures are not always in agreement, but (Erokhin et al, 1986) gave relation for Nuselt number of air in bound spaced as

$$Nu = ke/k = 0.18 (Gr_f Pr_f) 0.25 \quad (9)$$

Holman (2) developed a correlation in the form,

$$Ke/k = C (G_r P_r)^n (H/x)^m \quad (10)$$

where x = characteristic length, Ke = apparent effective thermal conducting of air expressed as

$$Nux = ke/k \quad (11)$$

m,n = dimensionless parameters. Holman (2004) listed values of the constants, c, n and m for a number of physical circumstances. The values are to be used for design purposes in the absence of specific data for geometry being studied. Once the Nuselt number is calculated the convective heat coefficient is evaluated with the classical equation.

$$Nux = h_l L/k_f \quad (12)$$

L = characteristic length = diameter for a tube, length for a horizontal plate height for a vertical plate. So that Eq (12)

$$Nux = hx/k_f \quad (13)$$

And the convective heat transfer coefficient can be expressed as

$$h_1 = k_f Nux/x \quad (14)$$

2.4. Enthalpy of enclosed air

(a) Heat Flux Across Wall

The heat transfer by convection and conduction across air and walls of system can be expressed as

$$q = hA (T_1-T_2) \quad (15)$$

And by applying Eq. (14) inEq(15)

$$\frac{q}{A} = \frac{k_f \, Nux \, (T_1 - T_2)}{x} \quad (16)$$

Both the Grashof number and the Nuselt numbers depend on the characteristic length and they greatly influence the estimates of medium parameters.

3. Methodology

Analytical and computational methods were used on idealized horizontal air plate element within enclosed space to establish optimum and critical insulation thickness models for plane wall and radial systems.

3.1. Establishment of heat transfer equations

The idealized structural model is as shown in Fig. 2.

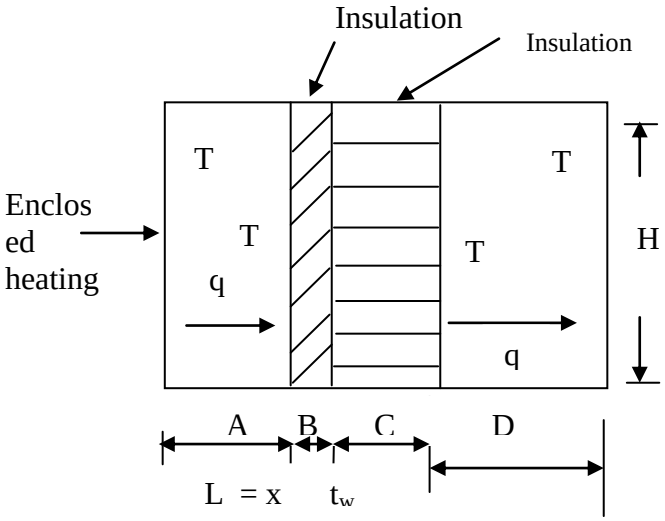

Fig. 2. Idealized insulated heat transfer structural model.

The structural element is used to establish the thermal resistances of heat transfer elements. Four thermal resistances are encountered due to elements A,B,C,D respectively increasing the thermal resistance of a system decreases the heat loss or heat transfer.

The application of basic laws of heat transfer, the quantity of heat transferred or loss from the system of Fig. 2 can be expressed as

$$q = h_1 A(T_1 - T_2) = \frac{k_w A}{t_w}(T_2 - T_3) = \frac{k_i A}{t_i}(T_3 - T_4) = h_0 A(T_4 - T_5) \quad (17)$$

By applying concept of overall heat transfer coefficient the thermal resistance Network is established,

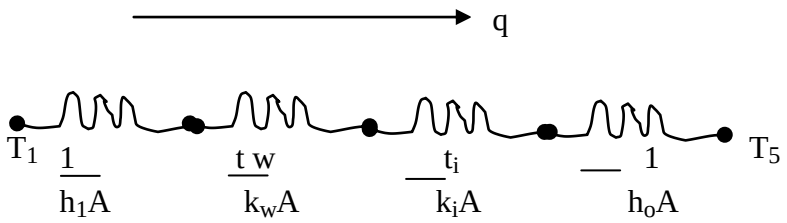

Fig. 3. Thermal resistance network of idealized heat transfer system.

But the overall heat transfer coefficient U is expressed as

$$U = \frac{1}{\frac{1}{h_I} + \frac{t_w}{k_w} + \frac{t_i}{k_i} + \frac{I}{h_o}} \quad (18)$$

Equation (17) expressed in terms of overall heat transfer coefficient is

$$q = UA\Delta T_{overall} \quad (19)$$

The overall heat transfer is therefore calculated as the ratio of the overall temperature difference to the sum of the thermal resistances and can be expressed as,

$$q = \frac{T_1 - T_5}{\frac{1}{h_1 A} + \frac{t_w}{k_w A} + \frac{t_i}{k_i A} + \frac{1}{h_o A}} \quad (20)$$

where, h_1 = convective heat transfer coefficient of heating air, A = heat transfer area, t_w = wall thickness, t_i = insulation thickness, k_w = thermal conductivity of wall material, k_i = thermal conductivity of insulating material, h_o = convective heat transfer coefficient of ambient air.
Equation 20 shows that increasing the conductive resistances reduces the quantity of heat transferred and if the thickness of the wall to be insulated is neglected, increasing the thickness of insulation reduces the quantity of heat loss.

3.2. Modeling insulation thickness of plane walls

From Fig. 2, Eq. (17) and assuming the thickness of wall is small compared to the insulation thickness so that the thermal resistance associated with the geometry is negligible,

$K_i A (T_3 - T_4)/t_i = h_0 A (T_4 - T_5)$, so that

$$t_i = \frac{k_i}{h_o}\left[\frac{T_3 - T_4}{T_4 - T_5}\right] \quad (21)$$

Similarly from Eq. (17)

$q = \frac{k_i A(T_3 - T_4)}{t_i}$, so that

$$t_i = \frac{k_i A (T_3 - T_4)}{q} \quad (22)$$

Difficulties arise in the application of Equations 21-22 when the interface temperatures T_2, T_3 and T_4 are unknown. Application of Eq. (22) requires the knowledge of the overall heat transferred out of the system. Using Eq. (17) the interface temperatures are evaluated as

$$T_2 = T_1 - q/h_1 A$$
$$T_3 = (T_2) - \frac{q\, t_w}{K_w A} \quad (23)$$
$$T_4 = \left(\frac{q}{h_o A}\right) + T_5$$

Equation 21 and Eq. (22) are the optimum insulation thickness for plane walls.

3.2.1. Critical insulation model: plane wall

At critical insulation the heat transfer is maximized, a condition causing the interface temperatures T_2, T_3 and T_4 to be equal and T_5 tending to interface temperatures ($T_2 = T_3 = T_4 = T_5$), and Eq. (21) becomes

$$t_{ic} = k_i/h_o \quad (24)$$

3.3. Modeling insulation thickness of radial system

The similar method of section (3.2) was followed. A cylindrical radial system is shown in Fig 4.

$$r_2 - r_1 = t_i \quad (25)$$

If the cylinder is split into two Fig. 5 similar to Fig. 2 is obtained

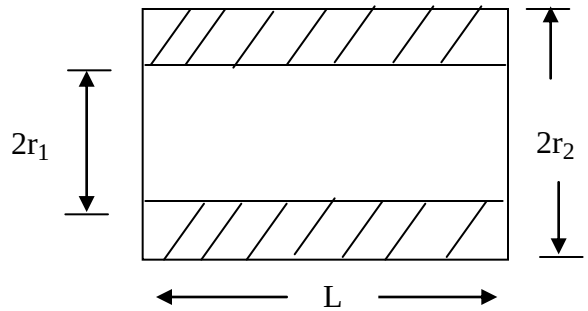

Fig. 4. Depiction of surface insulation of radial system (cylinder).

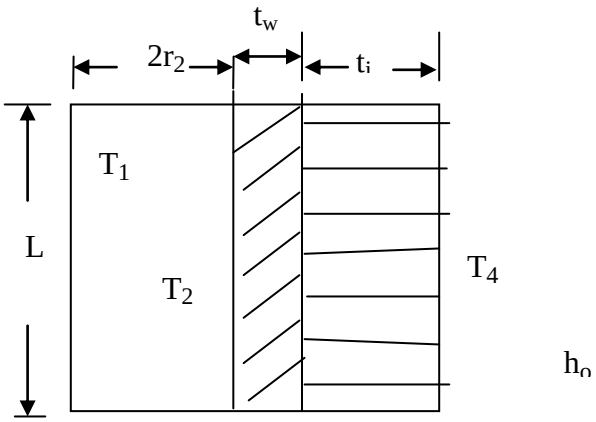

Fig. 5. Depiction of insulation thickness of radial system (cylinder).

For cylinder

Area, $A = 2\prod r_2 L$

By Eq. (17), $q = k_i A (T_3-T_4) = \dfrac{h_o A(T_4 - T_5)}{t_i}$

so that

$$t_i = \frac{k_i}{h_o}\left(\frac{T_3 - T_4}{T_4 - T_5}\right) \quad (26)$$

This is the same as Eq. (21) and this confirms that relations derived for plane walls apply to radial systems so that both the optimum and critical insulation thickness of radial systems can be expressed respectively as

$$t_i = \frac{k_i}{h_o}\left(\frac{T_3 - T_4}{T_4 - T_5}\right) \quad (27)$$

$$= \frac{k_i A(T_3 - T_4)}{q}$$

$$t_{ic} = k_i/h_0 \quad (28)$$

where, A = surface area of heat transfer surface. The optimum and critical radius of insulation are then specified respectively as

$$r_o = r_1 + \frac{k_i}{h_o}\left(\frac{T_3 - T_4}{T_4 - T_5}\right) \quad (29)$$

$$r_o = r_1 + k_i/h_o \quad (30)$$

r_2 = outer insulation radus, r_1 = insulation radus $rc < r_2 < r_o$

3.4. Optimization of insulation thickness

Employing Eq. (20) and assuming the conductive resistance of wall,

$tw/ k_w = 0$

$$q = \frac{T_1 - T_5}{1/h_i A + t_i/k_i A + 1/h_o A} \quad (31)$$

$$\frac{1}{h_i A} + \frac{ti}{k_i A} + \frac{1}{h_o A} = \frac{T_1 - T_5}{q} \quad (32)$$

$$\frac{1}{h_i A} = \frac{T_1 - T_5}{q} - \frac{t_i}{k_i A} - \frac{1}{h_o A}$$

$$h_i A = \frac{q}{T_1 - T_5} - \frac{k_i A}{t_i} - h_o A$$

$$h_1 A (T_1 - T_5) = q - k_i A \frac{(T_1 - T_5)}{t_i} - h_o A (T_1 - T_5)$$

$$q = h_1 A (T_1 - T_5) + k_i A \frac{(T_1 - T_5)}{t_i} + h_o A (T_1 - T_5) \quad (33)$$

By gradient method of optimization and with respect to thermal potential difference $(T_1 - T_5)$

$$\frac{\partial q}{\partial (T_1 - T_5)} = h_1 A + \frac{k_i A}{t_i} + h_o A = 0 \quad (34)$$

$$h_\cdot = \frac{k_i}{t_i} + h_o = 0 \quad (35)$$

$$t_i (h_1 + h_o) + k_i = 0$$

$$t_i = \frac{-k_i}{h_1 + h_o} \quad (36)$$

- The insulation thickness decreases as the film coefficients, h_1 and h_o increases and correspondingly heat transfer increases as maximum heat transfer occurs at minimum insulation thickness as found in Eq. (36).
- Equation 36 shows that as the film coefficients increase the there are maximum heat transfer and the optimum insulation thickness is increased.

The absolute value of Eq. (36) is employed in the computation of the overall heat transfer.

4. Computation of numerical data and analysis

This involves determination of similarity parameters of the convective heat transfer coefficients. The similarity parameters of the convective heat transfer coefficient are the Nuselt number given by Eq. (12) and the Grashof number given by Eq. (4). The Nuselt number is a function of Grashof number and Prandtl number, Nu = f (G_{rf}, P_{rf}) in free convection flow.The steps involved are**:**

(a) Making basic assumptions

- The heat flow is one dimensional
- The film physical parameters are affected by increasing temperatures.
- Horizontal plate element in enclosed space used.
- Film temperature and temperature drop assumed

(b) Idealizing horizontal air plate element in enclosed space and employing appropriate classical relation of section 2 and models of section 3

4.1. Computation of results

Film temperature, $T_f = 300^{oC}$ and temperature drop of heating fluid, $T = T_1 - T_2 = 50^oC$. This is the temperature difference of the up steam and down stream of the heating fluid element. The fluid element is dimensioned as shown in fig where wall thickness is very small compared to the insulation.

4.1.1 Computation of Heating medium Parameters.

(a) Computation of temperatures,

T_1 and T_2 .T_1 and T_2 are the stream temperatures of enclosed space see Fig 6 and Fig 7 ,$T_f = 300\ ^oC = 573K$. (assumed for analysis)

$$T_f = \frac{T_1 + T_2}{2} \quad (37)$$

$$T_1 - T_2 = 50\ ^oC \quad (38)$$

$$T_1 = 50 + T_2 \quad (39)$$

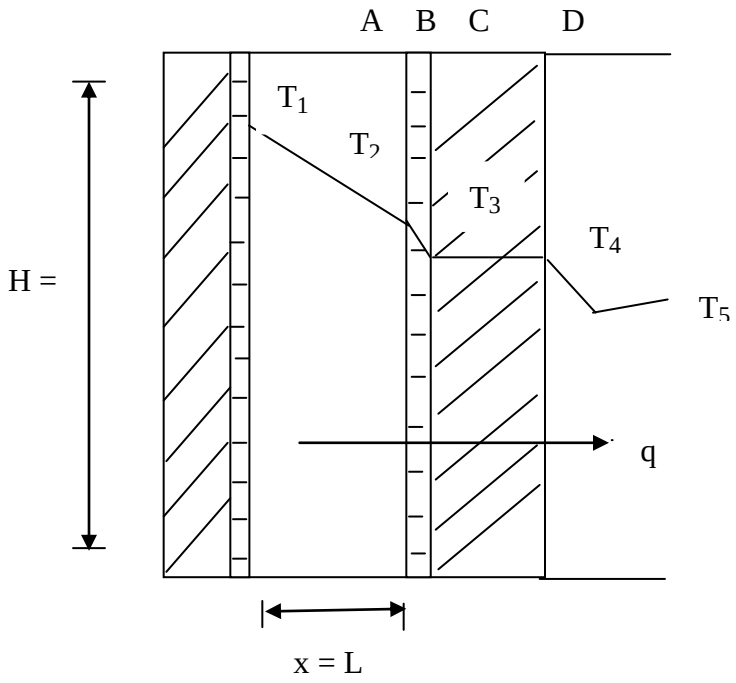

Fig. 6. Temperature variation across a four-layer plane wall.

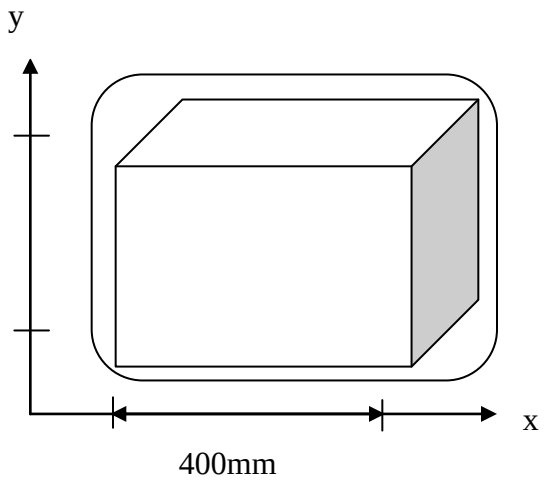

Fig. 7 Depiction of horizontal plate in enclosed space.

Putting Eq. (39) in Eq. (37)

$$T_f = 300 = \frac{(50 + T_2) + T_2}{2}$$

$600 = 2T_2 + 500$, $2T_2 = 500$, $T_2 = 275\ ^oC = 548k$, Putting T_2 in Eq. (39), $T_1 = 50 + 548 = 598K$.

(b) Computation of Similarity Parameters.

(i) Computation of Grashof number. Eq. (4) is used to evaluate the Grashof number, using the film temperature $T_f = 573K$.

$B = 1/T_f = 1.7542x10^{-3}$, $g = 9.81m.s^2$, $x = L = 0.4m$

At the film temperature of $T_f = 573K$, the values of the physical properties of heating fluid are evaluated as

$\rho_f = 0.6173kg/m^3$, $\nu_f = 47.56x10^{-6}m^2/s$, $P_{rf} = 0.68$, $k_f = 0.04498W/mk$. Putting the values of the above physical properties in Eq (4), $G_{rf} = 2.422x10^7$

(c) Computation of Nuselt number, Nuf

Putting the following values extracted from the work of (Hollands et al ,1975), c = 0.061, n = 1/3 , m = 0 in Eq (10),N_{uf} = 15.52,also by using Eq. (9), ,N_{uf} = 11.47. Equation 12 shows that the convective heat transfer coefficient increases as Nuselt number increases, therefore we use $N_{uf} = 15.52$ in our analysis.

(d) Transfer coefficient

Equation 14 is used to evaluate the convective heat transfer coefficient by putting the values of k_f, N_{uf} so far evaluated in previous sections and x = 400mm in Eq. (14) to obtain $h_1 = 1.7452w/m^2K$. (Erokhin et al., 1986) gave the range of values of convection transfer coefficient for heating or cooling air as 1.0 – 150w/m^2k and for heating and cooling of water 200 – 12000 w/m^2k, heating and cooling of oils 50 – 1800 w/m^2K.

(e) Computation of heat transfer, q

Equation 16 is used to compute the overall heat transferred, q , as

$$q = \frac{k_f A(T_1 - T_2)N_{uf}}{x}$$

$$= \frac{0.04498x\,0.06(598-548)15.52}{0.4} = 5.3257W$$

(f) Computation of interface temperatures, T_2, T_3 and T_4

If the thickness of wall to be insulated is small, then $T_2 = T_3$, T_4 is evaluated with Eq. (23) as

$$T_4 = \frac{q}{h_o A} + T_5 = \frac{5.2357}{3\,x\,0.06} + 298 = 327.1K$$

where, T_5 = ambient temperature = 25°C , h_o = convective heat transfer coefficient air = 3w/m^2K as reported by (Markus and Morris,1980).

(g) Computation of optimum insulation thickness

Using Fibre glass insulation

Putting q = 5.2357, A = 0.06, $T_3 = 548$. $T_4 = 327.1$,$k_i = 0.03$ in Eq. (22), $t_i = 75mm$. Also putting $k_i = 0.03$, $T_3 = 548$, $T_4 = 327.1$ $T_5 = 298$ and $h_o = 3$ in Eq. (21), $t_i = 75.9mm$.

(h) Computation of critical insulation thickness

Putting $k_i = 0.03$ and $h_o = 3$ in Eq. (24),$t_{ic} = 10mm$,Now $t_{ic} < t_i$ ie 75.9mm > 10mm. The heat flow increases up to the thickness of insulation of 10mm but decreases after wards to attain optimum at insulation thickness of 75.9mm, when the heat flow is expected to be best minimum. Using asbestos insulation with $k_i = 0.17$ and other values as in Eq. (22) and Eq. (21) $t_i = 430.3mm$, $t_{ic} = 56.67mm$.

5. Modeling and discussion of results

Excel graphics and curve fitting methods were employed.

5.1. Graphical modeling.

Table 1 and Fig. 8a show that the optimum insulation thickness is greater than the critical insulation thickness and the heat flow decrease after the attainment of critical insulation. The graphics also show that the critical insulation model is influenced by physical properties of hot and cold fluids.

Table 2 and Fig. 8b for insulation using Asbestos material show that the insulation thickness is greatly influenced by the thermal conductivity of the insulating material. The insulating thickness increase with increasing thermal conductivity and the thermal equipment accommodates more space. The model graphics show that insulation increases heat loss up to critical point.

5.2. Curve fitting and modeling

The graphics of Fig. 8 suggests that the Heat transfer – Insulation response of fibreglass insulation and Asbestos insulation have a hyperbolic response. A hyperbolic model thus fits data of Table 5.1. The equation of rectangular hyperbola for the curve fitting of data is expressed.

$$xy = c$$
or
$$y = c/x \quad (40)$$

where, c = parameter that estimates the dependent variable ,y (heat transferred) with the independent variable (insulation).The curve fitting method used is a least squares procedure achieved by minimization of sum of squares of residuals as follows:

$$\text{Error or residual} = y_i - y = y_i - c/x_i \quad (41)$$

$$\text{Error} = \sum_{i=1}^{n}(y_i - c/x_i)^2 \quad (42)$$

By minimizing sum of squares of residuals with respect to parameter , c

$\partial s/\partial c = 0$

$$\partial s/\partial c = -2 \sum (y_i - c/x_i) / x_i = 0 \quad (43)$$

By expanding Eq.(43),

$$\sum_{i=1}^{n} (y i/xi) - c\sum_{i=1}^{n} (1/x_i^2) = 0 \quad (44)$$

Equation 44 is needed to evaluate the parameter c. Once c is evaluated the equation of the curve is established. We need to evaluate sums of y_i/x_i and sums of $1/x_i^2$ for all data points.

5.2.1 Modeling insulation for fibre glass

The summations of columns 4 and 5 of Table 2 are substituted in Eq (44) to estimate the parameter c, as 25.45454741- 0.06402c = 0 ,∴ c = 424.2425 ,Putting c = 424.2425 in Eq (40), the equation of rectangular hyperbola that fits fiberglass insulation data becomes

y = 424.2425/x
or
xy = 424.2425 (45)

The zeros of this function can be estimated by estimating the asymptotes – a straight line to which the curve approaches as the distance from the origin increases. It is also the tangent to the curve at infinity ie the curve touches the asymptote at two coincident points at infinity.

Asymptote to a curve is established using the method of (Stroud, 1995) as follows: Asymptote parallel to x – axis can be found by substituting y = mx + c, in the equation of curve and evaluating m and c.

Putting y = mx + c in Eq. (45) and equating the coefficient of highest powers of x to zero, x (mx + c) = 424.2425 ,mx^2 + xc = 424.2425

Equating the coefficient of highest power of x to zero
m = 0 , c = (424.2425)/x
Hence the asymptote to x – axis is , y = 424.2425/x

For the asymptote of y – axis
x = (y-c)/m , Putting this in Eq. (45)
(y-c/m)y = 424.2425 , y^2-yc/m = 424.2425 , y^2 /m – (yc)/m = 424.2425
Equating coefficient of highest power of y = 0
1/m = 0 , so that equation of line becomes by dividing through equation of line.
y = mx + c by m to obtain y/m = x + c/m
∴ x = 0 is the equation of the asymptote to the y – axis
This means that for no insulation putting the value x = 0 to the curve equation, the maximum heat transfer is infinite.

5.2.3. Modeling insulation for asbestos.

Following similar procedures of section employing Eq. (43) and Table 3.
9.2026136996 – 0.004006c = 0,∴ c = 22 97.2076, Putting c in Eq. (40)

y = 2297.2076/x
or
xy = 2297.2076 (46)

By similar procedures,

Asymptote to x – axis is

y = 2297.2076/x (47)

Asymptote to y – axis is x = 0

5.2.4. Prediction with models
The hyperbolic models were used to predict the response of the functions and presented in Table 4.

6. Conclusion

Critical and optimum insulation models are developed for plane walls and radial systems found in Engineering and sciences. The critical insulation model of Eq. (24), $t_i = k_i/h_o$ is found to be conservative because it does not consider the film coefficient, h_1 associated with hot fluid or heating chambers. The new model for critical insulation thickness is found in Eq. (44) and expressed as

$$t_{ic} = \frac{k_i}{h_o + h_1}$$

The optimum insulation model to ensure minimal heat loss for comfort zone is developed as,

$$t_i = \frac{k_i}{h_o}\left(\frac{T_3 - T_4}{T_4 - T_5}\right) = \frac{k_i}{h_o} R = \frac{k_i A(T_3 - T_4)}{q}$$

Insulation heat transfer of fiberglass and Asbestos are represented by hyperbolic model. The model has infinite response of heat transfer when the insulation is zero because the hyperbola meets the asymptotes at infinity. The analytical models gave the optimum insulation thickness of 75.9 mm for fiberglass and 430.3mm for Asbestos. These gave optimum heat transfers for fiberglass and Asbestos as 5.2357W. Both the analytical and Computational methods are applicable. These methods are recommended for heat transfer system that has heating chamber temperature not more than 300°C and heat loss not more than 5w, however the analytical procedures of this work can be adopted in the design of any heat transfer system in which insulation provided using, xy = 424.2425 and 2297.2076 for fibre glass and asbestos insulation, respectively. X = thickness of insulation, mm, and y = heat transferred, Watts.

Table 1
Heat transfer with fiberglass and asbestos material insulations

Fiber glass K_i = 0.03 W/mK		Asbestos K_i = 0.17 W/mK	
tif(mm),x	q(W),y	tia(mm),x	q(W),y
5	79.52	20	112.66
10	39.76	40	56.33
15	26.51	60	37.55
20	19.88	80	28.16
25	15.9	100	22.53
30	13.25	120	18.78
35	11.36	140	16.09
40	9.94	160	14.08
45	8.84	180	12.52
50	7.95	200	11.27
55	7.23	220	10.24
60	6.63	240	9.39
65	6.12	260	8.67
70	5.68	280	8.05
75	5.3	300	7.51
80	4.97	320	7.04
85	4.68	340	6.63
90	4.42	360	6.26
95	4.19	380	5.93
100	3.98	400	5.63
105	3.79	420	5.36
110	3.61	440	5.12
		460	4.9

Table 2
Curve fitting computations for fibre glass insulation

tif(mm) = x	q(W) = y	1/x	y/x	1/x^2
5	79.52	0.2	15.904	0.04
10	39.76	0.1	3.976	0.01
15	26.51	0.066666667	1.767333333	0.004444
20	19.88	0.05	0.994	0.0025
25	15.9	0.04	0.636	0.0016
30	13.25	0.033333333	0.441666667	0.001111
35	11.36	0.028571429	0.324571429	0.000816
40	9.94	0.025	0.2485	0.000625
45	8.84	0.022222222	0.196444444	0.000494
50	7.95	0.02	0.159	0.0004
55	7.23	0.018181818	0.131454545	0.000331
60	6.63	0.016666667	0.1105	0.000278
65	6.12	0.015384615	0.094153846	0.000237
70	5.68	0.014285714	0.081142857	0.000204
75	5.3	0.013333333	0.070666667	0.000178
	4.97	0.0125	0.062125	0.000156
85	4.68	0.011764706	0.055058824	0.000138
90	4.42	0.011111111	0.049111111	0.000123
95	4.19	0.010526316	0.044105263	0.000111

100	3.98	0.01	0.0398	0.0001
105	3.79	0.00952381	0.036095238	9.07E-05
110	3.61	0.009090909	0.032818182	8.26E-05
SUM		0.73816265	25.45454741	0.06402

Table 3
Curve fitting computations for asbestos insulation

tia(mm) = x	q(W) = y	1/x	y/x	1/x^2
20	112.66	0.05	5.633	0.0025
40	56.33	0.025	1.40825	0.000625
60	37.55	0.016666667	0.625833333	0.000278
80	28.16	0.0125	0.352	0.000156
100	22.53	0.01	0.2253	0.0001
120	18.78	0.008333333	0.1565	6.94E-05
140	16.09	0.007142857	0.114928571	5.1E-05
160	14.08	0.00625	0.088	3.91E-05
180	12.52	0.005555556	0.069555556	3.09E-05
200	11.27	0.005	0.05635	0.000025
220	10.24	0.004545455	0.046545455	2.07E-05
240	9.39	0.004166667	0.039125	1.74E-05
260	8.67	0.003846154	0.033346154	1.48E-05
280	8.05	0.003571429	0.02875	1.28E-05
300	7.51	0.003333333	0.025033333	1.11E-05
320	7.04	0.003125	0.022	9.77E-06
340	6.63	0.002941176	0.0195	8.65E-06
360	6.26	0.002777778	0.017388889	7.72E-06
380	5.93	0.002631579	0.015605263	6.93E-06
400	5.63	0.0025	0.014075	6.25E-06
420	5.36	0.002380952	0.012761905	5.67E-06
440	5.12	0.002272727	0.011636364	5.17E-06
460	4.9	0.002173913	0.010652174	4.73E-06
SUM		0.186714576	9.026136996	0.004006

Table 4
Prediction with models

Yp = 424.2425/x			Yp = 2297.2076/ x		
tif(mm)= x	q(W) = y	Yp	tia(mm)= x	q(W= y	Yp
5	79.52	84.8485	20	112.66	114.8604
10	39.76	42.42425	40	56.33	57.43019
15	26.51	28.28283333	60	37.55	38.28679
20	19.88	21.212125	80	28.16	28.7151
25	15.9	16.9697	100	22.53	22.97208
30	13.25	14.14141667	120	18.78	19.1434
35	11.36	12.12121429	140	16.09	16.40863
40	9.94	10.6060625	160	14.08	14.35755
45	8.84	9.427611111	180	12.52	12.76226
50	7.95	8.48485	200	11.27	11.48604
55	7.23	7.7135	220	10.24	10.44185
60	6.63	7.070708333	240	9.39	9.571698
65	6.12	6.526807692	260	8.67	8.835414

70	5.68	6.060607143	280	8.05	8.204313
75	5.3	5.656566667	300	7.51	7.657359
80	4.97	5.30303125	320	7.04	7.178774
85	4.68	4.991088235	340	6.63	6.756493
90	4.42	4.713805556	360	6.26	6.381132
95	4.19	4.465710526	380	5.93	6.045283
100	3.98	4.242425	400	5.63	5.743019
105	3.79	4.040404762	420	5.36	5.469542
110	3.61	3.85675	440	5.12	5.220926
			460	4.9	4.99393

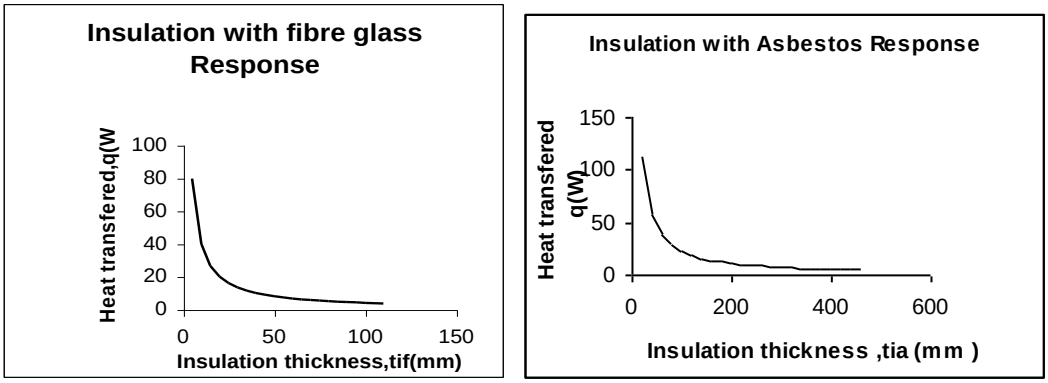

Fig. 8. Fibreglass and asbestos material insulation graphics.

References

Eugene, A, A., Theodore, B., 1996. Marks Standard Handbook for Mechanical Engineers, McGraw-Hill, Tokoyo.

Erokhin, V., Makhanko, G., Samoilenko,P.I., 1986. Fundamentals of Heat Engineering. Mir Publishers, Moscow.

Evans, L.B., Stefany N.E., 1965. An experimental study of transient heat transfer to liquids in cylindrical enclosures. AIChE Heat Transfer Conference, Los. Angeles.

Holman, J.P., 2004. Heat Transfer, McGraw Hill Publisher, Tokyo.

Hollands, K.G.T., Raithby, G.D., 1975. Convection equations for free convection heat transfer in horizontal layers of air. vol. 18, P.879,

Mac Gregor, R.K., Emery, A. F., 1969. Free convection through vertical plane layers; Moderate and high prandtl number fluids. J. Heat transfer, 91, 391.

Markus, T.A., Morris, E.N., 1980. Building Climate and Energy. Pitman Publishers, London.

Rajput, R.K., 2004. Heat and Mass Transfer. S. Chand and Company Limited, New Delhi.

Stroud, K. A., 1995. Engineering Mathematics. 4th ed., Macmillan Press limited, London.