UNIZIK JOURNAL OF ENGINEERING AND APPLIED SCIENCES (UJEAS)

Research Article

Modeling, Simulation and Analysis of Natural Gas Processing Routes Using HYSYS Design Applications

Funakpo, B.J. Kpuduwei; Philomena, K. Igbokwe; Joseph, T. Nwabanne; Matthew N. Abonyi.

Special Issue
A Themed Issue in Honour of Professor Onukwuli Okechukwu Dominic (FAS).

This special issue is dedicated to Professor Onukwuli Okechukwu Dominic (FAS), marking his retirement and celebrating a remarkable career. His legacy of exemplary scholarship, mentorship, and commitment to advancing knowledge is commemorated in this collection of works.

Edited by
Chinonso Hubert Achebe PhD.
Christian Emeka Okafor PhD.

UJEAS

UNIZIK JOURNAL OF ENGINEERING AND APPLIED SCIENCES

UNIZIK Journal of Engineering and Applied Sciences 4(2), March (2025), 2011-2023
Journal homepage: https://journals.unizik.edu.ng/index.php/ujeas
PRINT ISSN: 2992-4383 || ONLINE ISSN: 2992-4391

Modeling, Simulation and Analysis of Natural Gas Processing Routes Using HYSYS Design Applications

Funakpo, B.J. Kpuduwei; Philomena, K. Igbokwe; Joseph, T. Nwabanne; Matthew N. Abonyi

Department of Chemical Engineering, Faculty of Engineering, Nnamdi Azikiwe University, Awka, Anambra State
*Corresponding Author's E-mail: kpudo1982@gmail.com

Abstract
This paper focuses on the modeling and simulation of natural gas processing routes using HYSYS design applications, aimed at understanding the performance of gas processing routes. The objective is to simulate and analyze the thermodynamic behavior of the system under different operation. HYSYS, a leading process simulation software, was employed to model various unit operations, including the slug catcher, de-ethanizer, lean gas purifier, and debutanizer, to evaluate the material and energy balances, pressure-temperature relationships, and phase transition points. The results revealed key trends, such as the relationships between pressure, temperature, volume, enthalpy, and entropy, which are crucial for understanding the process dynamics, The study identified the specific conditions under which phase changes occur, including the bubble points, and emphasized the importance of accurate modeling in predicting the performance of each unit operation. The simulation also highlighted potential areas for improvement, such as the reduction of impurities in lean gas, which can enhance product yield and profitability. Overall, this research demonstrates the effectiveness of HYSYS simulation in modeling natural gas processing. The findings serve as a foundation for further studies aimed at improving the economic and environmental sustainability of natural gas processing industries by optimizing key parameters of the system such as pressure, temperature, etc.

Keywords: HYSYS, Natural gas processing, material balance, economics, modelling

1. Introduction

Natural gas processing is a crucial industrial operation that transforms raw natural gas from underground reservoirs into a marketable product suitable for consumer and industrial use (Mazyan, *et al.*, 2016). Methane (CH_4) is usually the main constituent of raw natural gas, which also contains other hydrocarbons (ethane, propane, butane, and pentane), water vapour, hydrogen sulphide (H_2S), carbon dioxide (CO_2), nitrogen (N_2), and other impurities (Reders, *et al.*, 2021). Purifying natural gas by eliminating impurities and separating valuable hydrocarbons is the aim of processing. Purifying natural gas by eliminating impurities and separating valuable hydrocarbons is the aim of processing. The usefulness of the storage and processing of natural gas was realized, but the cost of processing was high. Several research and avenues have been presented to minimize the cost, but when the production cost was reduced, large toxic gas was released, and the product impurities, which were the natural gas liquid (NGL) and the liquid petroleum gas (LPG), were high. Currently, many oil drilling and processing companies still flare gases due to the high cost of the gas processing system and the high impurities in natural gas products. In Cottonwooden Gas processing and light hydrocarbon recovery facility which was the case study, the issues encountered in the processing of natural gas were: release of high energy, low products purity level, high production cost and low income. Hence, this brings about the need to reduce the high cost of gas processing, minimize energy consumption, and increase the purity and yield of the desired product.

This procedure guarantees that the gas satisfies the quality requirements needed for storage, transit, and end-use uses like power generation, heating, and chemical synthesis. Because there was no infrastructure in place to treat or transport natural gas, it was first flared as a byproduct of oil extraction. It could only be used for localized lighting and heating applications. As demand for cleaner energy grew, the need to process natural gas increased. Early

processing methods focused on dehydration and separation of heavy hydrocarbons (Scholes, *et al*., 2012). The development of amine-based acid gas removal in the 1930s and cryogenic technology in the mid-20th century marked significant advancements (Ostovar & Nassar, 2022), (Ola, *et al.*, 2024). Due to its lower carbon footprint than coal and oil, natural gas is now a vital component of the world's energy supply. Modern processing techniques guarantee that gas satisfies strict safety and environmental standards. Natural gas liquids (NGLs) and sulphur are examples of by-products that are recovered for further financial gain. The use of sophisticated simulation tools like HYSYS and Aspen Plus has increased due to the complexity of natural gas processing. These applications allow engineers to model and optimize processing routes, predict system behavior under various conditions, and improve energy efficiency. By simulating real-world processes, these tools reduce design time, lower operational costs, and enhance the overall reliability of gas processing systems. Simulation and processing technological advancements will continue to propel the industry's development as the need for greener energy increases. Designing effective, sustainable, and financially feasible processes is the main goal of natural gas processing and modeling with programs like HYSYS. These goals are in line with industry standards to guarantee product quality, reduce environmental effect, and optimize resource use.

1.2 Natural Gas Processing Routes

Natural gas processing technologies are designed to transform raw natural gas from production wells into a marketable product by removing impurities, recovering valuable by-products, and ensuring compliance with industry standards. These technologies have evolved over-time to improve efficiency, reduce environmental impact, and maximize economic returns. The natural gas processing routes encompass a series of systematic operations designed to transform raw natural gas into a usable, high-quality product (Wood, *et al.*, 2012), (Faramawy, *et al.*, 2016). These routes ensure the removal of impurities, recovery of valuable by-products, and compliance with market and regulatory standards. Each route is tailored to address specific contaminants and conditions of the gas stream, maximizing efficiency and economic benefits. The major processing routes are Gas pre-treatment, Gas dehydration, Acid Gas Removal (Sweetening), Natural Gas Liquids (NGL) Recovery, Liquefied Natural Gas (LNG) Production, Gas-to-Liquids (GTL) conversion, etc., (Wood, *et al.*, 2012) (Klinkenbijl, *et al.*, 1999), (Santos, *et al.*, 2021), (Duval, (2023), (AlNouss, *et al.*, 2018), (Lim, *et al.*, 2013). Modern gas processing has been enhanced by simulation tools like HYSYS, which allow for the optimization of routes, energy efficiency improvements, and better design of integrated systems. Automation, real-time monitoring, and sustainable practices are also being incorporated to reduce environmental impact and operational costs. Natural gas processing routes play a pivotal role in ensuring that this critical energy resource is delivered to consumers in a safe, efficient, and environmentally responsible manner. The choice and design of processing routes depend on gas composition, market needs, and technological advancements. A a gas processing plant designed to produce pipeline gas with a full range of NGL products from a sour feed gas is shown in figure 1.1

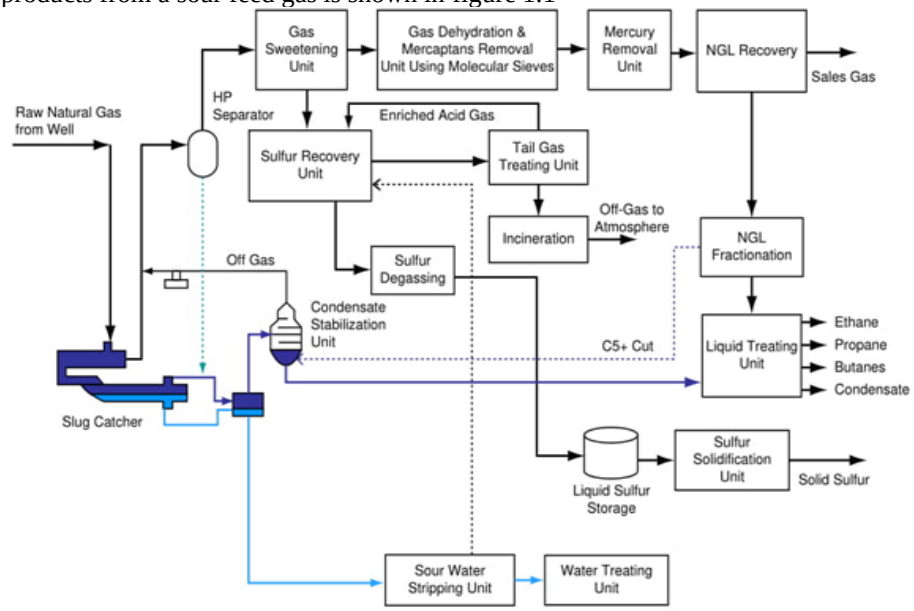

Fig 1.1: Typical setup of gas processing plant producing sales gas and NGLs (Mokhatab, *et al.*, 2018).

1.3 Related Works

There is a global drive towards increasing the utilization of natural gas and the need to minimize energy consumption and increase profit associated with the process. These objectives can be achieved by reducing the time required to get products to market, increasing the quality and quantity of products produced, and designing plants for optimum performance along their life cycle. In practice, these complicated problems are often not solved by hand for two reasons: Human error and Time constraints (Partho, 2021). In the oil and gas sector, process simulation has emerged as a crucial tool for engineers and operators. Process Systems Engineering (PSE), a crucial field in chemical engineering with many applications, is characterized by the need for process modeling, optimization, and control in order to optimize chemical and associated processes.

The process simulation component allows for a thorough modeling of a process or pipeline infrastructure, and Excel can be used to set up the economic simulation **(**AlNouss, *et al.,* 2018). It is possible to obtain output parameters that are established by the process simulation and shared with Excel, such as Residue Composition and Flow, Liquid Product Composition and Flow, Compressor Energy Requirements, Reboiler and Chiller Energy Requirements, etc., by using input data or parameters that are stored in Excel and shared with the process simulation. Examples of these parameters include Inlet Pressure of plant, Reflux percentage split to the Top of the Column, Outlet Temperature of Chiller, pressure of Demethanizer, Reboiler Duty, etc. Many researchers have investigated the attempts to improve the cost of natural gas processing and light hydrocarbon recovery plants over the years. These are all geared toward increasing the utilization of natural gas, which is readily available in Nigeria.

2.1 Methodology

The design application software (HYSYS) was deployed to model the process to obtain the purity of the LPG, lean gas and NGL products. The procedure involved in the modeling of the process in Hysys as shown in Figure 2.1. The property package model selected for the stream modeling in Hysys was Peng Robinson model which was efficient in the model of the gaseous streams. The process was modelled according to the process units outlined from the Cottonwooden Gas process and the image and outcome of the model (simulation results) were presented in the result section while Figure 2.2 shows a process flow diagram (PFD) of the process in HYSYS. This was done by calling up the HYSYS (Fig. 2.1) application from the desktop and navigating to the property package. The best property package model is selected (Peng-Robinson), and the required inlet stream is added to the process. Afterward, the model environment was navigated to, and the material stream wass chosen to properly create the inlet stream. The simulation of the stream was then confirmed, and the calculation of the properties of the stream was determined. Finally, the process units were added according to the cotton wooden process block flow diagram (Fig. 2.2), and the results are printed and discussed.

The natural gas process for the production of LPG, NGL and Lean gas is largely a gaseous process hence, the basic model theory suggests the peng Robinson model theory with Vander Waals weak gas force shown in equation 2.1. The Peng Robinson will be selected as the primary and basic model utilized for the gas process simulation in HYSYS because it is the best state equation for gas steady state simulation. Equation 2.1 to 2.7, the basic model theory used for the process modelling.

$$P = \frac{RT}{v-b} - \frac{a}{v(v+b)+b(v-b)} \quad (2.1)$$

Where P represents the pressure (bar), V represents the volume of the stream (m^3); T represents the temperature of the stream (℃) and R represents the general gas coefficients. The b represents;

$$b = 0.0778\frac{RT_c}{P_c} \quad (2.2)$$

$$a = a(T_c)\alpha \quad (2.3)$$

$$a(T_c) = 0.45727\frac{R^2T_r^2}{P_c} \quad (2.4)$$

$$\propto = [1 + (0.37464 + 1.5422w - 0.26992w^2)(1 - T_r^{0.5})]^2 \quad (2.5)$$

$$T_r = \frac{T}{T_c} \quad (2.6)$$

Where T_c represents the critical temperature, P_c represents the critical pressure, T_r and P_r represents the reduced temperature and pressure of the process, a,b,c, $\propto$ represents the coefficient of the van der waals state equation, w represents the acentric factor of the process.

The Peng Robinson equation will be the primary and basic model utilized for the gas process simulation in HYSYS and the essence is because it is the best state equation for gas steady state simulation.

Hence for the material flow, the basic model was shown in equation 2.7.

$$F_{in} = F_{out} \quad (2.7)$$

Where F represents input and out molar flow process.

Hence, irrespective of the process equipment that was modeled, the amount of process stream in will be equal to the stream out which implies absence of accumulation. The same principle will be deployed for the energy balance of the process.

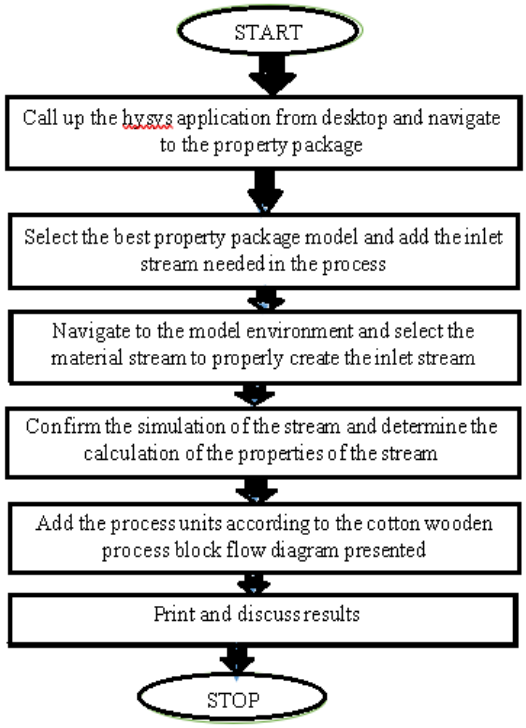

Figure 2.1; Flow chart of the modeling of the process in HYSYS

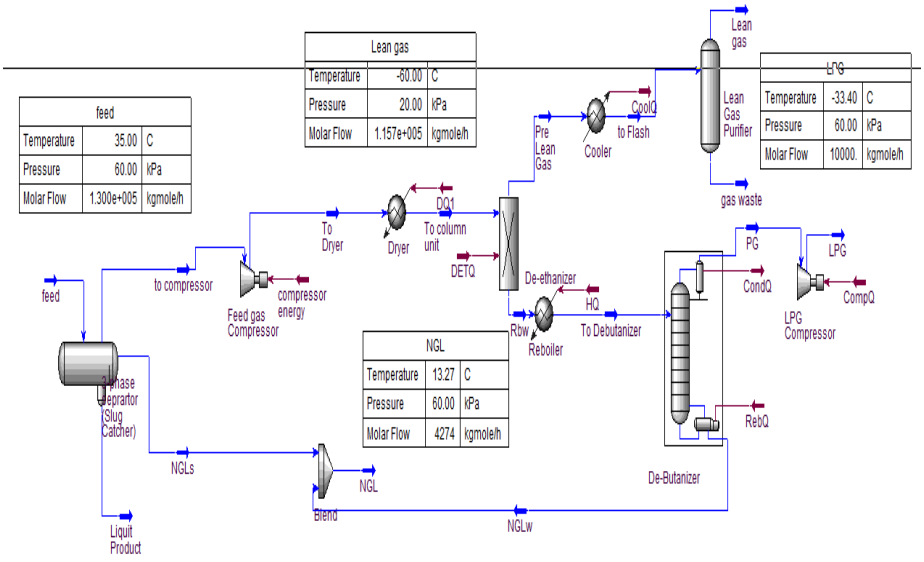

2.2 Process flow diagram (PFD) of the process in HYSYS

3.0 Results and Discussion

3.1 The General Material Balance

From the general material balance shown in Figure 3.1, it was observed that the lean gas (LG) exhibited the highest output, followed by liquefied petroleum gas (LPG) and then natural gas liquids (NGL). This outcome aligns with the

established results from the Cottonwooden Gas light hydrocarbon recovery process, where the primary focus is the production of lean gas for compression in the PFD shown in Figure 3.2. Compressing LG at high pressures generates compressed natural gas (CNG), a crucial commodity in Nigeria due to the ongoing transition from premium motor spirit (PMS) vehicles to CNG-powered vehicles. However, a significant challenge arises from impurities in the LG, which have been limiting its market value and profitability for the Cottonwooden Gas plant.

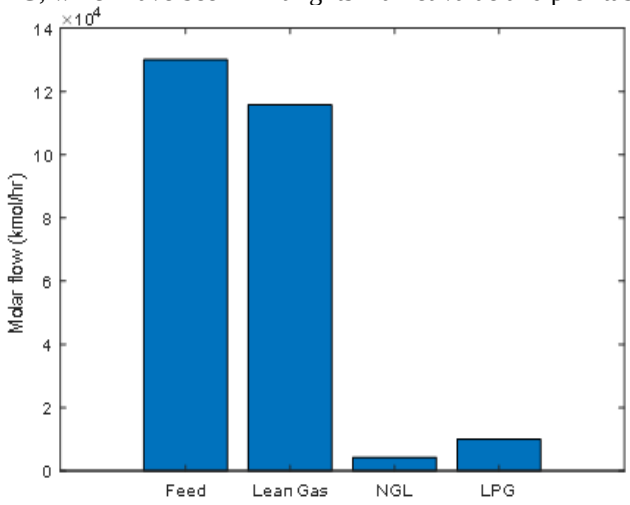

Fig 3.1: General Material Balance of the Process

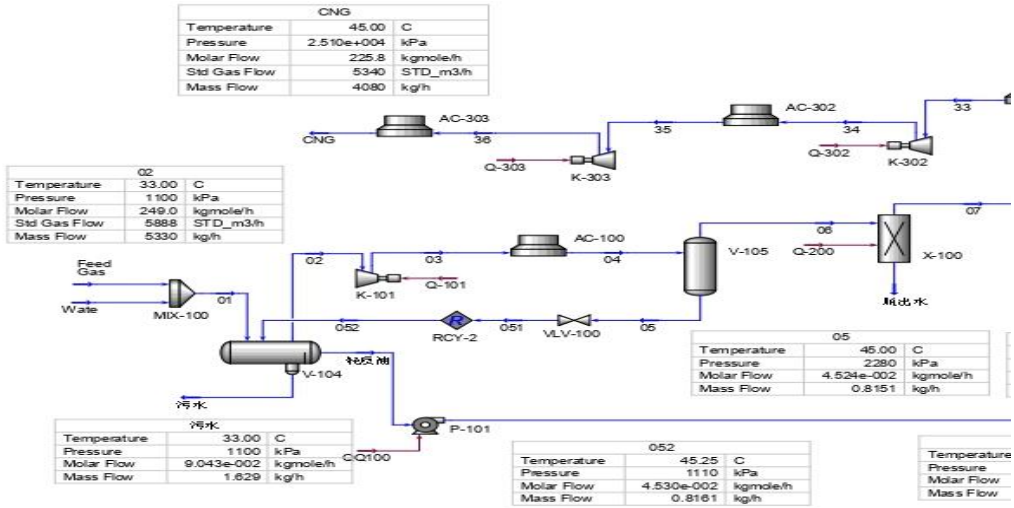

Fig. 3.2: PFD of the Cottonwooden Gas Process showing the material and energy balance

3.2. Material Balance around the slug catcher

From the results illustrated in Figure 3.3, a natural gas stream with a flow rate of 130,000 kmol/hr was fed into the slug catcher for initial processing. The slug catcher, a critical component in natural gas processing, is designed to separate gas and liquid phases, ensuring the efficient removal of liquids and particulates before the gas continues downstream. Upon processing, the slug catcher directed a gas stream of 129,500 kmol/hr to the compressor for further pressurization. Concurrently, the natural gas liquids (NGL) recovered from the slug catcher amounted to 500 kmol/hr. These NGLs were subsequently mixed into the final product stream, contributing to the value-added by-products of the process. Notably, the liquid waste from the slug catcher was recorded as 0 kmol/hr. This outcome is attributed to the feed entering the unit predominantly in the gaseous phase, with minimal or no entrained liquid present in the incoming stream. The absence of liquid waste highlights the efficiency of the upstream phase separation and the effectiveness of the slug catcher in handling the feed conditions. This balance underscores the importance of maintaining optimal operating conditions in the slug catcher to maximize gas recovery, ensure the seamless removal of liquids, and minimize waste, all of which contribute to the overall efficiency of the natural gas processing system.

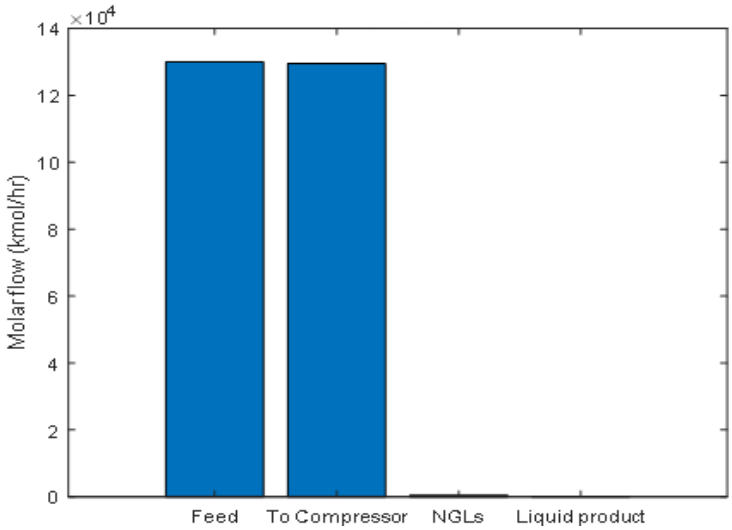

Fig 3.3: Material Balance around the slug catcher

3.3 Material Balance of the de-ethanizer

The material balance of the de-ethanizer, as presented in Figure 3.4, provides valuable insights into the distribution of the various components in the process. From the analysis of the data in Figure 3.4, it is evident that the amount of lean gas (LG) sent for purification was significantly larger than the amount directed to the debutanizer. This outcome can be attributed to the higher concentrations of methane (C_1) and ethane (C_2) present in the feed stream. These two components are the primary constituents of the lean gas, and their high concentration necessitates a larger volume of LG for further treatment. The lean gas (LG) was then subjected to purification in a flash column, a critical unit operation designed to enhance the purity of the gas. Flash distillation in the column allows for the separation of components based on differences in boiling points. By operating at a controlled pressure and temperature, the flash column effectively removes heavier hydrocarbons and other impurities, resulting in a purified lean gas stream. This purification process is essential for improving the quality of the LG, ensuring that it meets the desired specifications for its intended use, such as in CNG production or other commercial applications. The use of the flash column in the purification step highlights the importance of efficient separation techniques in natural gas processing. By selectively separating lighter components, such as methane and ethane, from heavier hydrocarbons, the process ensures that the final product is of the highest possible purity. The result is a lean gas stream that is suitable for use in applications that demand high-quality fuel or feedstock, while also minimizing the amount of undesirable by-products that might otherwise be present in the final product.

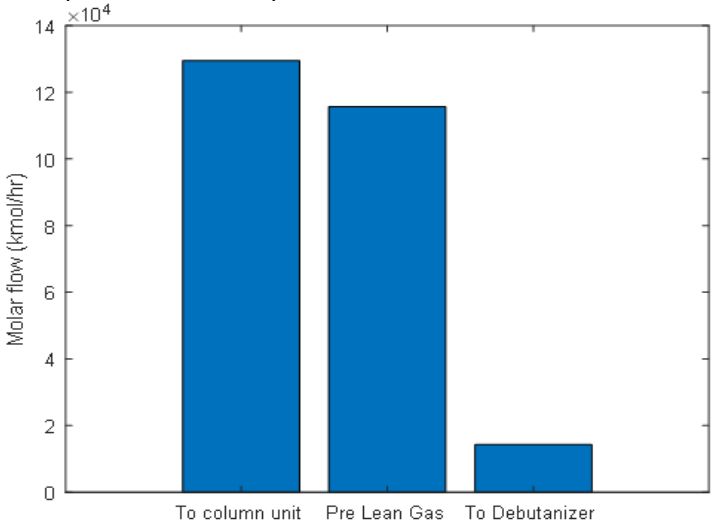

Fig 3.4**:** Material balance to the De-ethanizer

3.4. Material balance around the LG purification column

From the bar chart presented in Figure 3.5, it is observed that the inlet to the lean gas (LG) purifier was 115,700 kmol/hr. The process flow then branches into two primary outputs: the purified lean gas (LG) and the waste stream. The purified LG had a flow rate of 115,690 kmol/hr, while the waste stream consisted of 10 kmol/hr. This data suggests that a substantial portion of the feed stream is effectively purified and retained as high-quality lean gas, while a small fraction is removed as waste. At first glance, it could be argued that the flashing system, which is employed in the LG purifier, might be considered unnecessary due to the relatively small amount of waste being produced (10 kmol/hr). However, the use of the flashing system becomes vital due to its specific role in purifying the LG stream, particularly by removing impurities like hydrogen sulfide (H_2S) and carbon dioxide (CO_2). These two components are particularly detrimental to the quality of the lean gas and need to be removed to meet safety, environmental, and commercial standards.

The flashing system, while seemingly contributing to a minimal waste stream, plays a crucial role in removing up to 80,000 kmol per year of H_2S and CO_2 from the lean gas. This purification is necessary because the presence of these impurities in natural gas can lead to issues such as corrosion in pipelines, reduced efficiency in downstream processes, and non-compliance with regulatory standards for natural gas quality. Furthermore, hydrogen sulfide is highly toxic and poses significant health and environmental risks, making its removal an essential step in the processing of natural gas. The necessity of the flashing system lies in its ability to remove these impurities efficiently, even though the waste stream may appear small in comparison to the total amount processed. The system's ability to significantly improve the quality of the lean gas makes it an indispensable part of the purification process, ensuring that the final product meets the required specifications for commercial use, transportation, and storage. By doing so, the flashing system helps to optimize the entire natural gas processing operation, ensuring both the safety and economic viability of the process.

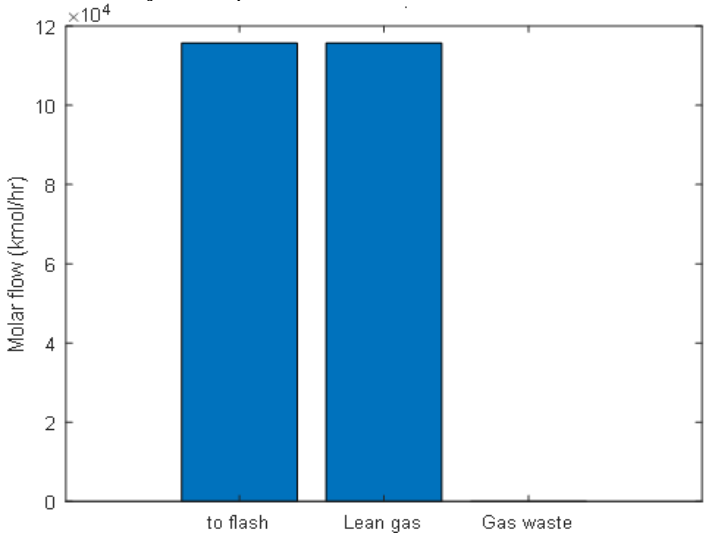

Fig 3.5**:** Material balance around the LG purification column

3.5. Balance around the De-butanizer

From the results presented in Figure 3.6, it is evident that the propane gas (PG) stream, which represents the top product of the de-butanizer, had a higher flow rate than the natural gas liquids (NGL) stream. This can be attributed to the composition of the feed stream, which contained significant amounts of propane (C_3), isobutane (i-C_4), and normal butane (n-C_4). These components, being lighter hydrocarbons, primarily contribute to the production of propane gas, and their higher concentrations in the feed stream naturally result in a larger output of PG from the de-butanizer. Specifically, the propane gas (PG) stream had a flow rate of 10,000 kmol/hr, significantly higher than the NGL stream, which had a flow rate of 4,274 kmol/hr. The higher flow rate of PG reflects the separation of propane from other heavier hydrocarbons such as butanes and heavier liquids in the de-butanizer column. Propane, being one of the most valuable components in the NGL fraction, is separated and purified for use in various industrial and domestic applications, including liquefied petroleum gas (LPG). The propane gas was subsequently compressed to generate LPG, which is then stored for future use. LPG, derived from propane, is an important fuel source in both domestic and industrial sectors due to its versatility, high energy content, and ease of transportation.

The compression process allows for the liquefaction of propane, increasing its density for easier storage and handling. Once liquefied, LPG can be transported in bulk for use as a cooking fuel, refrigerant, or even as an alternative to gasoline in vehicles. On the other hand, the NGL stream, which consists of a mixture of lighter hydrocarbons, was blended with the NGL recovered from the slug catcher. This blended NGL stream was then stored for future use or further processing. The combination of NGL from the de-butanizer and the slug catcher ensures that a consistent, high-quality NGL product is available, which can be further processed or sold depending on market conditions. These NGLs can be separated into their individual components—ethane, propane, butanes, and other liquid hydrocarbons—depending on their specific applications, including use in petrochemical production, gasoline blending, or other industrial uses. The separation and subsequent compression of propane to produce LPG, along with the blending of the NGL stream, illustrate the versatility and efficiency of the de-butanizer process in the natural gas processing system. By effectively separating and recovering valuable products like PG and NGL, the process contributes to maximizing the economic value of the natural gas stream while minimizing waste.

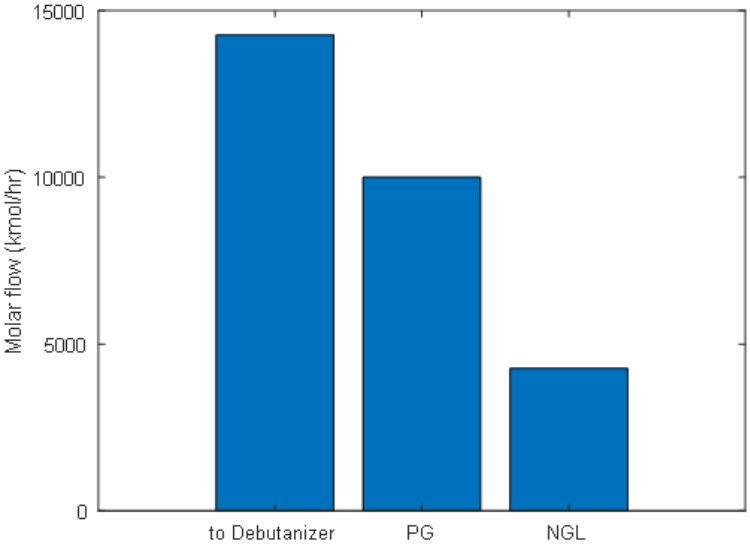

Fig 3.6: balance around the De-butanizer

3.6 Feed Stream Analysis

3.6.1 LPG Stream Analysis

The results from the plot of pressure versus temperature in Figure 3.7 reveal a logarithmic increase in pressure as the temperature rises. This indicates a linear logarithmic relationship between pressure and temperature for the stream. The bubble point of the stream occurred at a temperature of 111.629°C and a pressure of 4246.33 kPa. Similarly, the plot of pressure versus volume in Figure 3.8 shows a logarithmic increase in pressure as volume increases. This illustrates that pressure and volume are related logarithmically for the stream. The bubble point for the stream was reached at a pressure of 4246.33 kPa and a volume of 0.235278 m³/kmole. In the plot of pressure versus enthalpy presented in Figure 3.9, a near-logarithmic increase in pressure as enthalpy increases is observed, indicating a linear logarithmic relationship between pressure and enthalpy for the stream. The bubble point was achieved at an enthalpy of -111249 kJ/kmole and a pressure of 4246.33 kPa. From the plot of pressure versus entropy shown in Figure 3.10, a near-logarithmic increase in pressure as entropy increases is evident. This suggests a linear logarithmic relationship between pressure and entropy for the stream. The bubble point occurred at an entropy of 135.729 kJ/kmole·°C and a pressure of 4246.33 kPa. Finally, the plot of temperature versus volume in Figure 3.11 reveals a logarithmic increase in volume as temperature increases. This suggests a linear logarithmic relationship between temperature and volume for the stream. The bubble point for the stream was attained at a temperature of 111.629°C and a volume of 0.235278 m³/kmole.

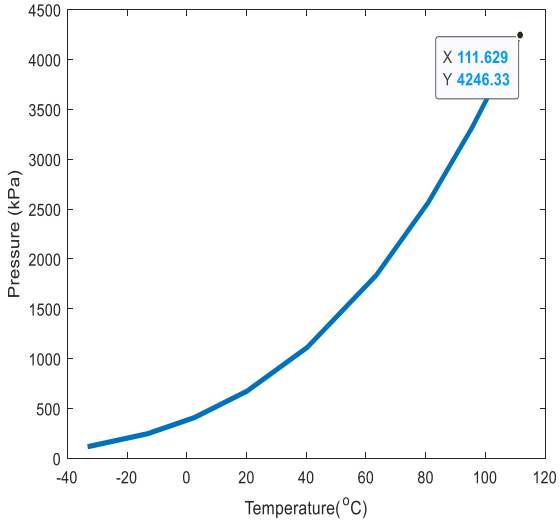

Fig 3.7. Pressure against temperature

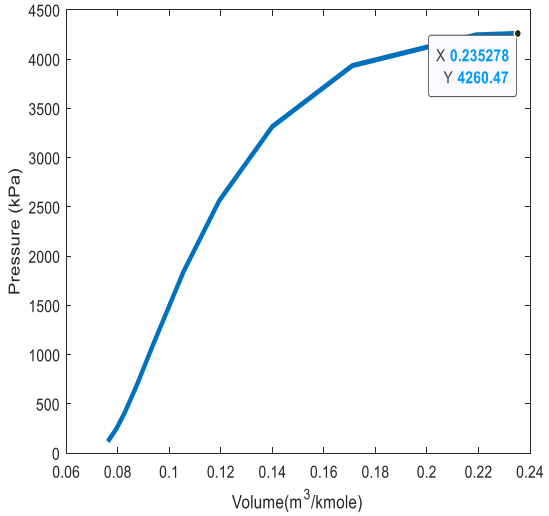

Fig 3.8; plot of pressure against volume

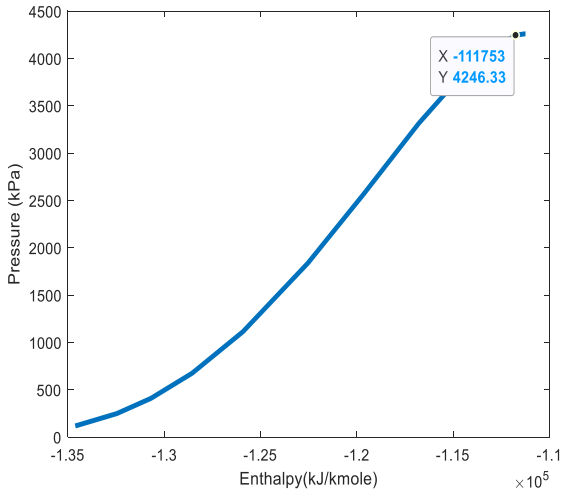

Fig 3.9: Plot of pressure against Enthalpy

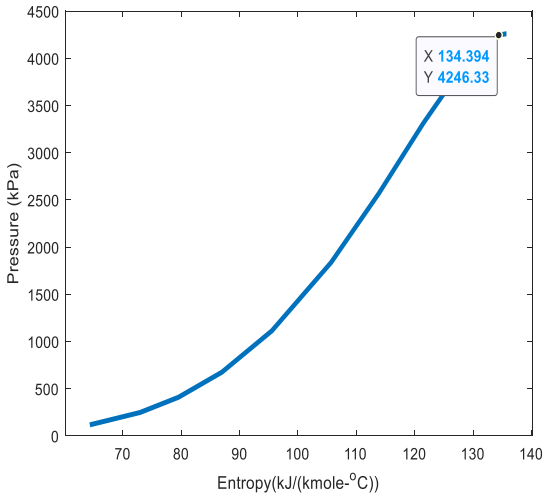

Fig 3.10: Plot of pressure against Entropy

3.6.1 LG Stream

The results from the plot of pressure versus temperature in Figure 3.12 indicate a logarithmic increase in pressure as the temperature rises. This suggests a linear logarithmic relationship between pressure and temperature for the stream. The bubble point of the stream, where phase change occurs, was achieved at a temperature of -62.3115°C and a pressure of 5896 kPa. This implies that at these specific temperature and pressure conditions, the gas starts to condense into its liquid phase, marking the point at which the stream transitions from a gas to a liquid. Similarly, from the plot of pressure versus volume in Figure 3.13, it is observed that pressure increases nearly linearly as volume increases. This demonstrates a near-linear relationship between pressure and volume for the stream, meaning that as the volume of the stream expands, the pressure increases in a nearly proportional manner. The bubble point for the stream in this case was achieved at a pressure of 5896 kPa and a volume of 0.0957601 m^3/kmole, highlighting the specific conditions at which the stream reaches its phase change. In the plot of pressure versus enthalpy presented in Figure 3.14, it is seen that pressure increases near-logarithmically as the enthalpy increases. This reflects a linear logarithmic relationship between pressure and enthalpy for the stream. The bubble point was observed at an enthalpy of -85745 kJ/kmole and a pressure of 5896 kPa. This suggests that as the enthalpy (which is a measure of energy content) increases, the pressure required for the phase change also increases, with these specific values marking the transition point of the stream. From the plot of pressure versus entropy shown in Figure 3.15, it is observed that pressure increases near-logarithmically as entropy increases. This again indicates a linear logarithmic relationship between pressure and entropy for the stream.

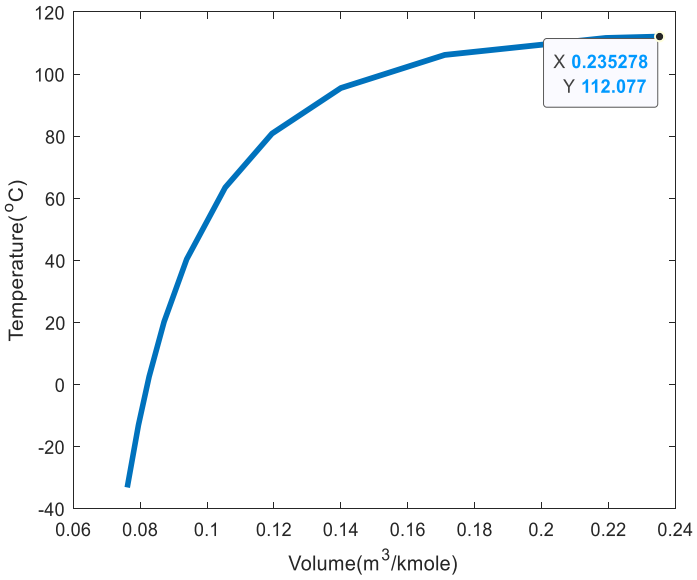

Fig 3.11**:** Plot of temperature against volume

The bubble point for the stream was reached at an entropy of 124.761 kJ/kmole·°C and a pressure of 5896 kPa. Entropy, representing the disorder or randomness in the system, influences the pressure required for the phase change, with the specified values marking the conditions under which the stream reaches its bubble point. Finally, in the plot of temperature versus volume in Figure 3.16, it is noted that there is a logarithmic increase in pressure as entropy increases. This suggests a linear logarithmic relationship between temperature and volume for the stream. The bubble point was achieved at a temperature of -62.3115°C and a volume of 0.0957601 m³/kmole. The temperature and volume relationship helps to establish the physical conditions at which the phase change occurs, providing crucial information for the design and operation of the natural gas processing system. These results are important in understanding the thermodynamic behavior of the stream and are integral to optimizing the processing conditions for efficiency and product quality.

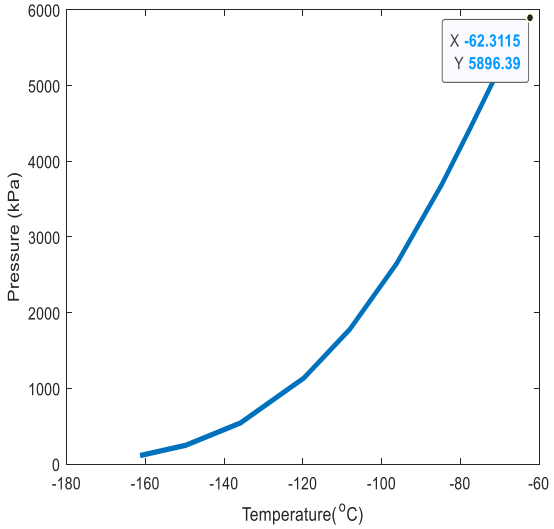

Fig 3.12: Plot of pressure against temperature

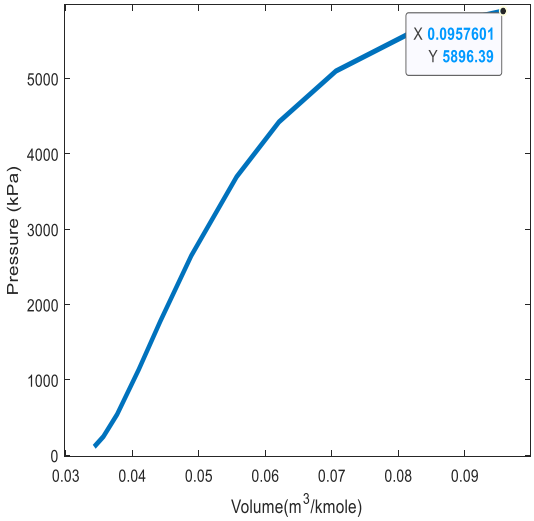

Fig 3.13: Plot of pressure against volume

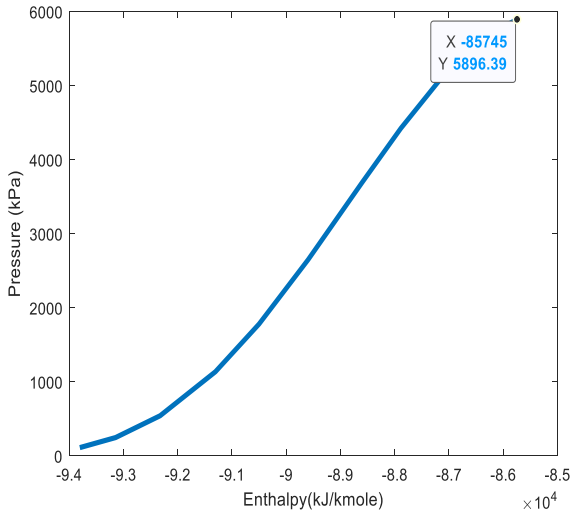

Fig 3.14**:** Plot of pressure against Enthalpy

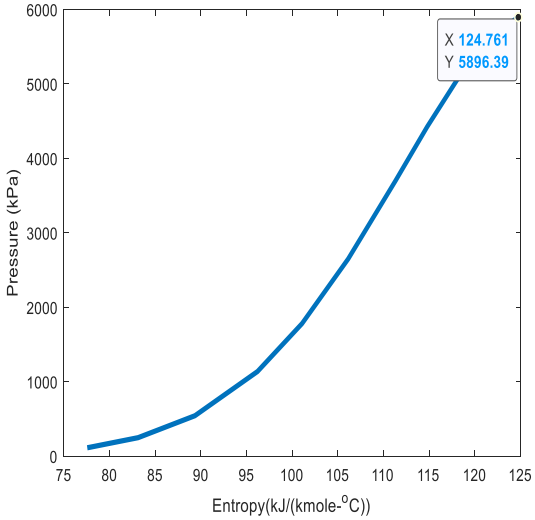

Fig 3.15: Plot of pressure against Entropy

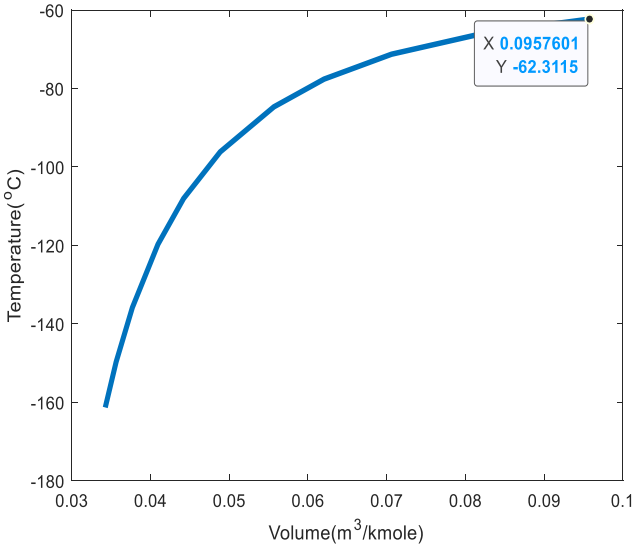

Fig 3.16**:** Plot of temperature against volume of the stream

4.1 Conclusion

The study of the natural gas processing routes using HYSYS simulation has provided valuable insights into the thermodynamic behavior and performance of various unit operations. The results from the material and energy balances, pressure-temperature relationships, and other critical thermodynamic plots indicate that each stage of the process, from gas purification to the separation of key components, exhibits distinct behaviors that are essential for the efficient design and operation of the system. The observed logarithmic and near-logarithmic relationships between pressure, temperature, volume, enthalpy, and entropy reveal critical trends that can help in optimizing the natural gas processing system. The bubble point and phase transitions, marked by specific temperature, pressure, volume, and enthalpy conditions, are key to understanding the phase changes that occur during gas treatment, purification, and separation. Moreover, the application of HYSYS simulation has proven to be an effective tool for modeling complex processes, offering the flexibility to modify operational parameters and optimize unit operations. This simulation approach provides a deeper understanding of the intricacies involved in natural gas processing, allowing for better decision-making in the design, operation, and optimization of gas processing plants. The introduction of optimization techniques, such as particle swarm optimization is recommended to enhance the efficiency of process plant operations, improve efficiency and reduce costs and improve overall system

performance. Future research could focus on further refining the simulation models to improve economic sustainability (Cost of operation) of natural gas processing systems.

References

AlNouss, A., Ibrahim, M., & Al-Sobhi, S. A. 2018. Potential energy savings and greenhouse gases (GHGs) emissions reduction strategy for natural gas liquid (NGL) recovery: Process simulation and economic evaluation. Journal of cleaner production, 194, 525-539.

Duval, S. 2023. Natural gas sweetening. In Surface Process, Transportation, and Storage (pp. 37-78). Gulf Professional Publishing.

Faramawy, S., Zaki, T., & Sakr, A. E. 2016. Natural gas origin, composition, and processing: A review. Journal of Natural Gas Science and Engineering, 34, 34-54.

Klinkenbijl, J. M., Dillon, M. L., & Heyman, E. C. 1999. Gas pre-treatment and their impact on liquefaction processes. In proceedings of the annual convention-gas processors association (pp. 299-307). Gas Processors Association.

Lim, W., Choi, K., & Moon, I. 2013. Current status and perspectives of liquefied natural gas (LNG) plant design. Industrial & engineering chemistry research, 52(9), 3065-3088.

Mazyan, W., Ahmadi, A., Ahmed, H., & Hoorfar, M. 2016. Market and technology assessment of natural gas processing: A review. Journal of Natural Gas Science and Engineering, 30, 487-514.

Mokhatab, S., Poe, W. A., & Mak, J. Y. 2018. Handbook of natural gas transmission and processing: principles and practices. Gulf professional publishing.

Ola, V. D., Mohyaldinn, M. E., Olugbade, T. O., & Amadi, A. H. 2024. Corrosion in Amine Gas Capturing Facilities: Processes, Challenges, and Mitigations—a Review. Process Integration and Optimization for Sustainability, 1-28.

Ostovar, A., & Nassar, N. N. 2022. Small-Scale Liquefied Natural Gas–Opportunities and Challenges. Energy Transition: Climate Action and Circularity, 269-314.

Partho, S. R., and Ruhul A. M. 2021. Aspen-HYSYS Simulation of Natural Gas Processing Plant. Journal of Chemical Engineering, IEB, 62-65.

Reders, K., Schmidt, M., & Schütze, A. 2021. Natural Gas. Handbook of Fuels: Energy Sources for Transportation, 119-159.

Santos, K. M., Menezes, T. R., Oliveira, M. R., Silva, T. S., Santos, K. S., Barros, V. A., ... & De Conto, J. F. 2021. Natural gas dehydration by adsorption using MOFs and silicas: A review. Separation and Purification Technology, 276, 119409.

Scholes, C. A., Stevens, G. W., & Kentish, S. E. 2012. Membrane gas separation applications in natural gas processing. Fuel, 96, 15-28.

Wood, D. A., Nwaoha, C., & Towler, B. F. 2012. Gas-to-liquids (GTL): A review of an industry offering several routes for monetizing natural gas. Journal of Natural Gas Science and Engineering, 9, 196-208.