JEAS

JOURNAL OF ENGINEERING AND APPLIED SCIENCES

Journal of Engineering and Applied Sciences 12 (2018), 1-9

Joint Torque and Motion Computational Analysis for Robotic Manipulator Arm Design

Emmanuel Chukwudi Agbaraji[1*], Hyacinth Chibueze Inyiama[2] and Ifeyinwa Obiora-Dimson[3]

[1] Department of Computer Engineering, Federal Polytechnic Nekede, Owerri, Nigeria

[2, 3] Department of Electronics and Computer Engineering, Nnamdi Azikiwe University Awka, Nigeria

[*]Corresponding Author's E-mail: wattchux@gmail.com

Abstract
The robotic manipulator is a reprogrammable arm system which comprises of linkages coupled together by joints. Since the joint actuator provides the needed torque that carries the links plus load; and the function of the robot system depends on the generated torque from the actuator, therefore it becomes essential to determine the maximum torque at every joint for proper actuator selection and optimum function of the manipulator. In most existing works especially the locally made robot arms, the joints torque was not calculated and the actuators were not properly selected. This work focuses on the design of the robot arm by evaluating the joints torques and analyzing the motion characteristics of the arm based on the selected joints torques. The robot arm joint actuators were selected based on the calculated joint torques. The motion computation was carried out using ODE (Ordinary Differential Equation) step solver method. From the results, the motion characteristic graphs of the joints followed desired trajectories. Hence, the joint actuators were properly selected and can control the links adequately. It was therefore recommended that this method should be applied in the design of robot systems especially to improve the local content.

Keywords: Robot Arm, Joint Torque, Actuator, Dynamic Model, Robotic Manipulator

1. Introduction

The robot arm comprises of links connected together by joints; and every joint contains a motor and gears. Every possible movement of the robotic manipulator is determined by the joint actuator, and the performance of the joint is influenced by the motor torque and the total torque generated at that joint due to load. Thus, it becomes necessary to design the joint properly for adequate joint torque control. The design of the joint involves calculating the torque due to the load connected at every joint, selecting the motors based on the calculated load torques at the respective joints and analyzing the applied torque and motion relationship. This method of joint design was carried out in Kafuko et al (2015). The joint torque at every joint of the robotic manipulator is optimized by the application of feedback subsystem and a controller designed based on the parameters of that joint and its motor.

Dynamics of the robotic manipulator studies the motion of bodies with consideration of the forces that cause the motion. The dynamic model of the manipulator describes the relationship between torque and motion, hence, making optimization of the manipulator output performance to be possible. According to Melchiorri, the dynamic model obtained using the Langrange-Euler method is simpler and more intuitive and also more suitable to understand the effects of changes in the mechanical parameters. He stated that the links are considered altogether, and the model is obtained analytically. However, he pointed out that the drawback of the model is that it is obtained starting from the kinetic and potential energies (non intuitive); the model is not computationally efficient. He continued to state that the Newton Euler method is based on a computationally efficient recursive technique that

exploits the serial structure of an industrial manipulator. On the other hand, its mathematical model is not expressed in closed form. Although, the two techniques are equivalent (provide the same results). The applied torque in the Lagrange Euler model is generated from the joint actuator and it differs depending on the location of the joint at the arm of the robot. This means that, before implementing this model, the joint torques must be determined.

Joint actuator selection is a common problem in most research works from the review. Different joints of a robotic manipulator carry different sizes of loads and experiences different torques. Hence, the actuators for the joints must be selected based on the total torques calculated at the respective joints. However, if the manipulator is designed and the joint actuators are selected without proper calculation of the total torques at the joints then the manipulator will not function properly even at no load when the torque generated at a joint goes beyond the torque produced by the actuator.

The major objectives of this work are to determine the total torque at every joint of the manipulator, select actuators based on the calculated torques at the respective joints and to carry out applied torque and motion computation for joint analysis.

2.0 Literature Review

Pachaiyappan et al (2014) described robot actuator as the mechanism that provides the necessary forces to move the mechanical structure. There are various kinds of actuators on field applied in order to control the parameters of industrial processes. An actuator can be described as a driver that runs some mechanical activity. For instance, if a process needs to open a valve for fluid motion or move a robotic arm for some appropriate action, there will be a motor with specific applied controls such as the speed and angular position control. The proper selection of actuator will dictate how effective a robot can perform a specific task. Actuators can be either mechanical or electrical and have varying strengths and weaknesses (Pachaiyappan et al, 2014) as demonstrated in table 1. The basic actuators used for controlling motion include:

- Air Motors
- Hydraulic Motors
- Clutch/Brake
- Stepper Motors
- Servo Motor

Table 1: Comparison of Actuators (Pachaiyappan et al, 2014)

Actuator Types	Strength	Weakness
Air Motor	Low Cost Easily Maintained Simple to Operate	Audible Compressor Noise Inefficient System Difficult to Regulate Speed
Hydraulic Motor	High loads possible Simple to operate	Slow System Inefficient System High maintenance Requirement
Clutch/Brake	Low Cost Effective for Light Load Easy to Perform System Matching	Uncontrolled Acceleration Components Prone to Wear Non-repeatable System
Stepper Motor	Simple Control Constant Load Accurate Position	Cannot Vary Load Can Lose Steps Resonance Problem
Servo Motor	High Performance Small motor Size Can Operate at High Speed	High Cost System Performance Limited by Controls Speed Limited by Electronics

According to Pachaiyappan et al (2014), steppers can be grouped into three categories that differ in terms of internal construction based on the use of permanent magnets and/or iron rotors with laminated steel stators: Permanent magnet, Variable reluctance, Hybrid. The term “servomotor” does not refer to one single kind of motor. Instead it refers to any type of motor that receives a command signal from a controller. In this same respect, any closed loop system can be referred to as a servo system.

According to Farhan (2013), motion control is a sub-field of control engineering, in which the position or velocity of a given machine are controlled using some type of actuating device. Most used actuating devices in mechatronics applications are electric actuating machines (DC motors), which are used in many, if not most, modern machines (e.g. electric cars, locomotives, fans, turbines, and drills), robotics (e.g. Mobile robot and robot arm). Two main motion control applications are of concern namely, mobile robots and robotic arms. The motion of robotic manipulators are described in Degrees of Freedom (DOF) which is the number of possible movements a robotic arm is capable of completing. Shweta and Sanjay, (2012) designed an articulated 5-DOF robotic arm by direct and inverse kinematic analysis methods which is capable of completing five degrees of freedom in different directional movements. The possibility of the number of DOF depends on the number of the actuators or motors used to complete the possible number of different movements. In the 5DOF (five functions) robotic arm, each movement or DOF has a DC motor (Kumar and Raja, 2014) and a controller attached to it.

Direct Current (DC) motors are often used in various industrial applications where a wide range of responses are required to follow a predetermined trajectory of speed or position under variable load (Agbaraji and Inyiama, 2015; Faramarzi and Sabahi, 2011). According to Fateh (2013), single joint robot arm system consists of three parts; arm, connected to actuator through gear train with gear ratio, n. The DC motor is an example of electromechanical systems with electrical and mechanical components. DC motor turns electrical energy into mechanical energy and produces the torque required to move the robotic bodies or linkages to the desired angular position, θ, or rotate with the desired angular speed, ω.

The joints of the manipulator experience different amount of torques depending on their locations in the structure of the manipulator. Joint actuators are designed and manufactured in different sizes and with different torque ratings and other parameters such as voltage, current, inertia etc. Since the actuator generates the force that moves the link, then it must produce a force greater or equal to the force produced due to link and possible payload. Therefore, the selection of the joint actuators becomes very vital in the development of a robust manipulator.

In the steps for actuator selection, first it is necessary to determine the maximum torque required for each joint motor. The torques are calculated by estimating the weight the motor shaft would have to be holding and multiply it by the distance from the center of gravity of the weight back to the motor shaft. The weight includes motors farther up the arm, the weight of the link arm etc. The calculated maximum torques for each joint motor was illustrated in Emerich (2007).

The second step is choosing joint motors based on the calculated torque values at the respective joints. The motors chosen by Emerich (2007) are high torque stepper motors from Anaheim Automation. The specific motor model numbers were shown in his work. Stepper motors output good amount of torque as well as high precision. These motors are small and light weight which is crucial in keeping the torque lower for the motors father back in the arm. The applied torque from the actuators determines the working characteristics such as distance and velocity of the robot arm. Such characteristics can be carried out with the dynamics of the arm and considering each joint independently as a single input single output system.

Chuy et al (2017) carried out a research on using dynamics to consider torque constraints in manipulator planning with heavy loads. In their work, they carried out a computation using the dynamic model however, the applied joint torque was not determined.

3.0 Design methodology

The approach here involves dynamic description of the robot arm, joint torque calculation, actuation selection, and computation of the Lagrange Euler model using the ODE iteration method in MATLAB. The dynamics of the robot arm is described using the Lagrange Euler equation.

$$M(q)\ddot{q} + C(q,\dot{q})\dot{q} + G(q) = \tau \quad (1)$$

Where **q** is the joint variable vector, **M(q)** is the completed inertia matrix, $C(q,\dot{q})\dot{q}$ is the centripetal and Coriolis torque vector, **G(q)** is the gravitational torque vector. Adopting the model in Liu and Liu (2016), the robot arm dynamic equation for DOF that requires lifting is:

$$\begin{bmatrix} M_{11}(q) & M_{12}(q) \\ M_{21}(q) & M_{22}(q) \end{bmatrix}\begin{bmatrix} \ddot{q} \\ \ddot{q} \end{bmatrix}+\begin{bmatrix} C_{11}(q,\dot{q} & C_{12}(q,\dot{q} \\ C_{21}(q,\dot{q} & C_{22}(q,\dot{q} \end{bmatrix}\begin{bmatrix} \dot{q} \\ \dot{q} \end{bmatrix}+\begin{bmatrix} g_1(q) \\ g_2(q) \end{bmatrix}=\begin{bmatrix} \tau_1 \\ \tau_2 \end{bmatrix} \quad (2)$$

Where τ_1 and τ_2 are the total applied torques at joint I and II respectively.

The robot manipulator here has two joint variables that require lifting: two angles q_1 and q_2. The inertia matrix is represented as:

$$M(q)=\begin{bmatrix} M_{11} & M_{12} \\ M_{21} & M_{22} \end{bmatrix}$$

where

$$M_{11}=\frac{1}{4}m_1L_1^2+m_2L_1^2+J_1$$
$$M_{12}=M_{21}=\frac{1}{2}m_2L_1L_2\cos(q_1-q_2)$$
$$M_{22}=J_2+\frac{1}{4}m_2L_2^2$$

The centripetal and coriolis matrix is:

$$C(q,\dot{q})=\begin{bmatrix} C_{11} & C_{12} \\ C_{21} & C_{22} \end{bmatrix}$$

Where

$$C_{11}=0$$
$$C_{12}=\frac{1}{2}m_2L_1L_2\sin(q_1-q_2)\dot{q}_2$$
$$C_{21}=\frac{1}{2}m_2L_1L_2\sin(q_2-q_1)\dot{q}_1$$
$$C_{22}=0$$

Due to the complexity of this method of robotic manipulator dynamics analysis, Lin et al (1997) assumed that g(q) = 0. However, Kim et al (2010) and Liu et al (2016) did not take such assumption.

$$g_1=\left(\frac{1}{2}m_1+m_2\right)gL_1\cos q_1$$
$$g_2=\frac{1}{2}m_2gL_2\cos q_2$$

3.1. Torque

Torque is defined as the turning or twisting **force** and it is calculated using the following relationship:

$$Torque\ (\tau)=Force\ (F)\times Length\ (L) \quad (3)$$
$$\tau=F\times L \quad (4)$$
$$F=W=m\times g \quad (5)$$

Where W is the weight, m is the mass, and g is the acceleration due to gravity, therefore,

$$\tau=m\ \times g\times L \quad (6)$$
$$\tau=W\times L \quad (7)$$

In order to estimate the torque required at each joint, the worst case scenario must be chosen. In figure 1, a link of length L is rotated clockwise. Only the perpendicular component of length between the pivot and the force is taken into account. It was observed that this distance decreases from L3 to L1 (L1 being zero). Since the equation for torque is length (or distance) multiplied by the force, the greatest value will be obtained using L3, since F does not change. The link can be similarly rotated counterclockwise and the same effect will be observed.

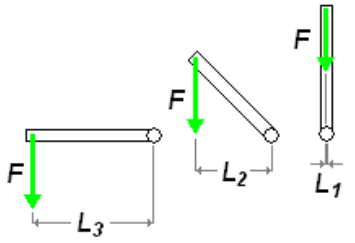

Figure 1: Rotation of link length (Benson, 2013)

This means that a joint revolving vertically is not involved in weight lighting and thus has a zero torque.

3.2. Joint Torques Calculations

The major purpose of joint force calculations in figure 2 is for motor selection. In most robot arm designs the weight of the robot arm and the weight of a possible load are considered in choosing a motor in order to achieve a good design that can support the weight of the arm and the load.

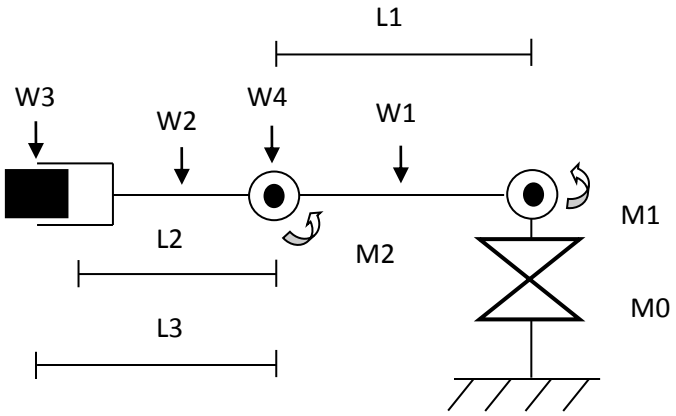

Figure 2: Force calculation of joints

To carry out a moment arm calculation, multiplying downward force with the linkage lengths. This calculation must be done for each lifting actuator. The manipulator design in this work has two DOF that requires lifting, and the center of mass of each linkage is assumed to be Length/2. The remaining degree of freedom does not require lifting. For the manipulator to function properly the following point must be met: The total torque about a joint must be equal or less than the torque produced by the actuator ($\sum \tau_{about\ a\ joint} \leq \tau_{produced\ by\ the\ actuator}$). The robotic manipulator joint torque is determined as follows:

Torque about Joint 1:

$$M_1 = \frac{L_1}{2} * W_1 + L_1 * W_4 + \left(L_1 + \frac{L_2}{2}\right) * W_2 + (L_1 + L_3) * W_3 \quad (8)$$

Torque about Joint 2:

$$M_2 = \frac{L_2}{2} * W_2 + L_3 * W_3 \quad (9)$$

Where W1 = Weight of link1, W2 = Weight of link2, W3 = Weight of load, W4 = Weight of actuator (servo) 2, L1 = Length of link1, L2 = Lenth of link2, L_{Load} = Length of the load (end-effector), L3 = Length2 + (½*L_{Load}), M0 = Base Actuator (Cylindrical movement), M1 = Actuator 1 (Joint I), M2 = Actuator 2 (Joint II).

However, the above equations for torque calculation only deal with the case where the robot arm is being held horizontally (not in motion). For the arm to move from a rest position, acceleration is required. To solve for this added torque, it is known that the sum of torques acting at a pivot point is equal to the moment of inertia (**J**) multiplied by the angular acceleration (**a**):

$$\tau = J \times a \quad (10)$$

The following parameters were applied for the joint torque calculation: W1 = 10.9N, W2 = 0.6N, W3 = 0.12N, W4 = 0.04N, L1 = 1.25m, L2 = 1m, L_{Load} = 0.71m, L3 =1.4m

From the joint torque calculations, the calculated torques at the two joints that require lifting and the selected actuators torques for the respective joints are shown in table 2. With the calculated joint torques, the joint actuators were selected from the actuator stepper motor manufacturer's catalog of NMB Corporation.

Table 2: Calculated and Selected Torques for the Joints I and II

Joint	Calculated Torque (g-cm)	Selected Actuator Toque (g-cm)
I	2056.7	2200
II	451.7	500

4.0 Results and Discussions

The results of the computation of the robot arm dynamics based on the Lagrange-Euler iteration method are as shown in figures 3, 4, 5, and 6. The position, velocity against time graph of the joints I and II show a good trajectory of the robot arm movements. The angular position and velocity graphs of link I and II did not maintain a straight line or zero position; rather they yielded regular change in movement. Secondly, the position graph of link II appears higher than that of link I because the link II makes its angular movement in such a way that it adds to that of link I. These satisfy the performance characteristics of the arm as illustrated in Agbaraji et al, (2017).

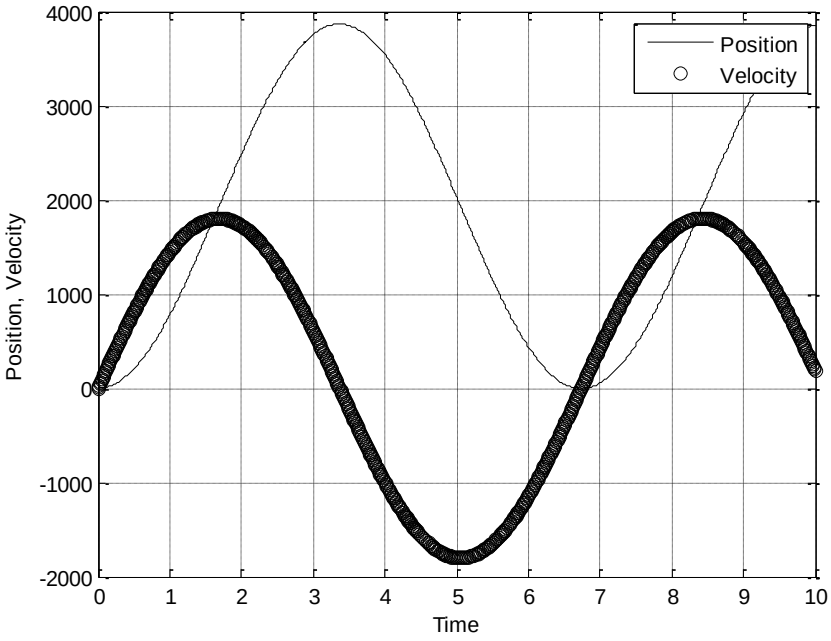

Figure 3: Comparing velocity and position of the robot arm for joint I

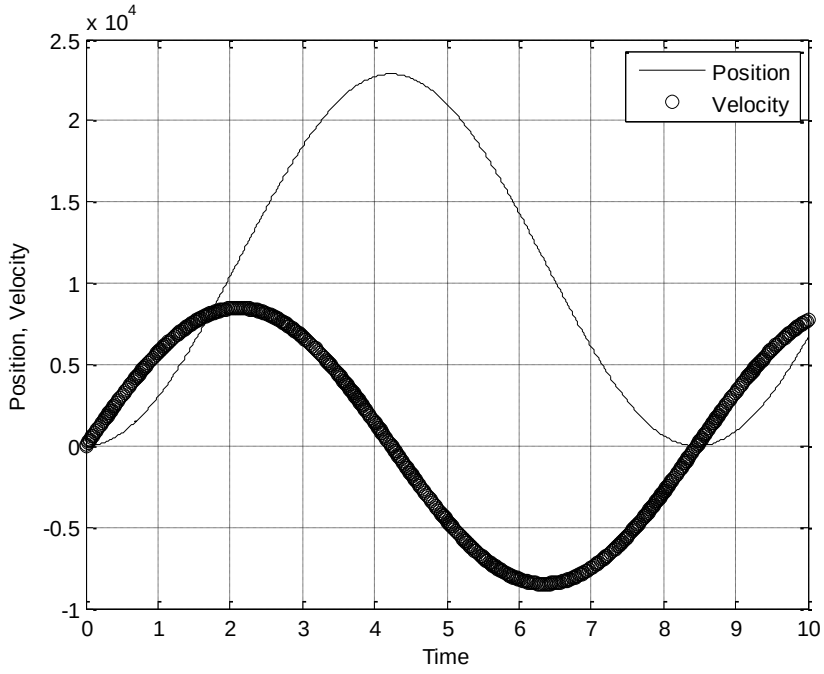

Figure 4: Comparing velocity and position of the robot arm for joint II

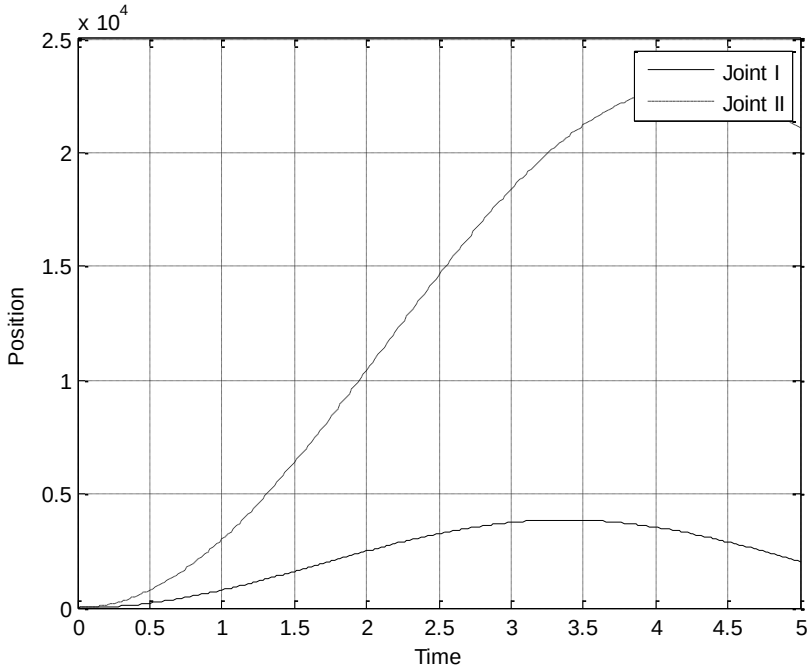

Figure 5: Comparing positions of Joints I and II of the robot arm with initial values; q1=30, q2=30, $\dot{q}_1$=$\dot{q}_2$=0

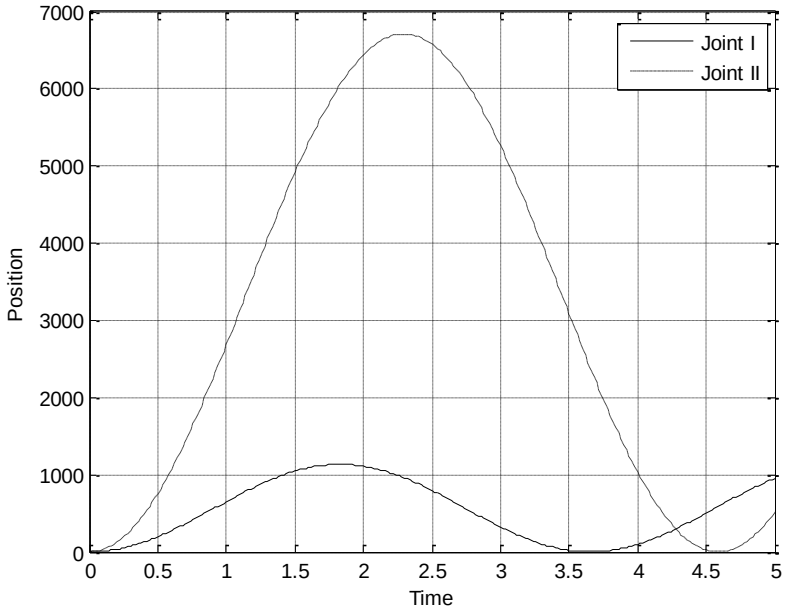

Figure 6: Comparing positions of Joints I and II of the robot arm with initial values; q1=45, q2=45, $\dot{q}_1$=$\dot{q}_2$=0

5.0. Conclusion and Recommendation

The robotic manipulator is a complex system which has been difficult to model completely; as a result many researchers have modeled it based on different perspectives and purposes. The aim of the model is to develop a mathematical description of the system which can help in the development and optimization of the characteristics of the system. The Lagrange Euler model was applied here because the purpose of this work is to analyze the working characteristics of the arm based on the selected torque. The applied torques were selected based on the calculated joint torque. From the computation results of the Lagrange Euler iteration the position and velocity graphs of the joints followed the desired trajectories. This method of joint torque calculation and actuator selection should be applied in every robot design for proper functioning of the system.

This work reveals the importance of actuator selection and also provides the method of calculating and selecting the actuators properly for different joints in the robot arm. The ODE step solver method was applied here to solve the Lagrange Euler equation and analyze the working characteristics of the arm. Robotic manipulators have become the backbone of many industrial processes due to their ability to improve production quality and quantity. However, due to their cost many companies cannot acquire them and there has not been any solution coming from the local content due to lack of the knowledge of developing functional and sustainable robotic systems. There is need for local content improvement in the area of robotics. This work solves the problem of joint actuator selection which is a common problem in most robot design especially the locally made systems.

References

Agbaraji, E.C., Inyiama H.C., and Okezie C.C., 2017. Dynamic Modeling of 3-DOF Articulated Robotic Manipulator Based on Independent Joint Scheme, Physical Science International Journal, USA, 15(1): 1-10

Agbaraji E.C., and Inyiama H.C., 2015. A Survey of Controller Design Methods for a Robot Manipulator in Harsh Environments, European Journal of Engineering and Technology, UK, Vol. 3, No. 3, Pg. 66

Benson, C., 2013. Robot Arm Torque Tutorial, Retrieved on January 22, 2016 from: http://www.robotshop.com/blog/en/robot-arm-torque-tutorial-7152

Chuy, O.Y., Collins, E.G., Shema, A., and Kopinsky, R. 2017. Using Dynamics to Consider Torque Constraints in Manipulator Planning with Heavy Loads, Revised August 30, 2017 from: http://dynamicsystems.asmedigitalcollection.asme.org/article.aspx?articleid=2582841

Emerich, M., 2007. Design of a six Degree-of-Freedom Articulated Robotic Arm for Manufacturing Electrochromic Nanofilms, Retrieved on October 19, 2016 http://oldweb.sbc.edu/sites/default/files/Honors/MEmerich.pdf

Faramarzi, A., & Sabahi, K., 2011. Recurrent fuzzy neural network for DC motor control, Paper presented at 5th International Conference on Genetic and Evolutionary Computing (ICGEC), IEEE, pp.93-96

Farhan, A. S., 2013. Mechatronics Design of Motion Systems; Modeling, Control and Verification, International Journal of Mechanical & Mechatronics Engineering IJMME-IJENS, Vol: 13, No: 02, pp.1-17

Fateh, M.M., 2008. On the Voltage-Based Control of Robot Manipulators, International Journal of Control, Automation and Systems, Vol. 6, No. 5, pp. 702-712

Kafuko, M., Singh, I., and Wanyama, T., 2015. Design of a Robotic Arm for Teaching Integrated Design, Canadian Engineering Education Association (CEEAIS) Conference, pp.1-5

Kim, C.S., and Lee, K.W., 2011. Robust Control of Robot Manipulators using Dynamic Compensators under Parametric Uncertainty, International Journal of Innovative Computing, Information and Control, Vol. 7, No. 7, pp.4129-4137

Kumar, R.G.U.V., and Raja, C.V.N., 2014. Comparison between FSC and PID Controller for 5DOF Robot Arm, International Journal of Emerging Trends in Electrical and Electronics (IJETEE – ISSN: 2320-9569), Vol. 10, Issue. 2, pp.1-6

Lin, F., and Brandt, R.D., 1997. An Optimal Control Approach to Robust Control of Robot Manipulators, National Science Foundation, pp.1-19

Liu, J., and Liu, R., 2016.Simple Method to the Dynamic Modeling of Industrial Robot Subject to Constraint, Advances in Mechanical Engineering, Vol. 8(4) pg.4

Melchiorri, C., Dynamic Model of Robotic Manipulators, University of Bologna

Pachaiyappan, S., Micheal B.M., Sridhar T., 2014. Design And Analysis Of An Articulated Robot Arm For Various Industrial Applications, *IOSR Journal of Mechanical and Civil Engineering (IOSR-JMCE), e- ISSN: 2278-1684, p-ISSN: 2320–334X, PP 42-53*

Shweta, P., and Sanjay, L., 2012. Position Control of Pick and Place Robotic Arm, EIE's 2nd Intl' Conf. Comp., Energy, Net., Robotics and Telecom