UJEAS

UNIZIK JOURNAL OF ENGINEERING AND APPLIED SCIENCES

UNIZIK Journal of Engineering and Applied Sciences 6(2), June (2026), 3602-3610
Journal homepage: https://journals.unizik.edu.ng/index.php/ujeas
PRINT ISSN: 2992-4383 || ONLINE ISSN: 2992-4391

# Improving battery technology using ANN based ultracapacitor

Nwogbu Celestine Chidi [1] *Chukwuagu Ifeanyi*, [2] *Adindu Charles .O.* [3]

Material and Metallurgy Department Enugu State University of Science and Technology, Enugu OSISATECH Polytechnic OWO Enugu state, Department of Electrical/Electronic Engineering, Caritas University Amorji-Nike, Emene, Enugu, Department of Electrical/Electronic Engineering
*Corresponding Author's E-mail: chukwuaguifeanyi35@gmail.com

**Abstract**
The paralytic form of business activities that mostly depended on battery for their daily routine business were caused by these factors low energy storage capability, slow charge rate, limited discharge capability, high internal resistance, excessive voltage sag, thermal instability, short operational lifespan, rapid aging, poor power handling, inefficient energy conversion, over-dependence on battery, load fluctuation stress, poor response to transients, ineffective energy management and high self-discharge. This was overcoming by introducing improving battery technology using ANN based ultracapacitor. To perfectly achieve this, it was done in this manner, battery technology was characterized and the causes of poor battery technology was established, conventional SIMULINK model for battery technology was designed and ANN was trained in the Causes of Poor Battery Technology Performance for an effective performance. Then, SIMULINK model for ultracapacitor was designed, SIMULINK model for improving battery technology using ANN based ultracapacitor was equally designed and the results obtained were validated and justified. The results obtained were the conventional Low energy storage capability that causes poor battery technology performance was28 $J \cdot kg^{-1} \times 10^3$. On the other hand, when an ANN based ultracapacitor was integrated into the system, it simultaneously improved to33.8 $J \cdot kg^{-1} \times 10^3$ and the conventional Load fluctuation stress that causes poor battery technology performance was17A. Meanwhile, when an ANN based ultracapacitor was imbibed into the system, it instantly reduced to15A. Finally, with these results obtained, it meant that the percentage improvement in battery technology when ANN based ultracapacitor was incorporated into the system was11.8%.

**Keywords:** Improving, battery, technology, ANN, based, ultracapacitor

## 1. Introduction

The rapid growth in renewable energy systems, electric vehicles (EVs), portable electronics, and smart grid applications has intensified the demand for energy storage technologies that are efficient, reliable, and durable. Conventional battery technologies, such as lithium-ion and lead-acid batteries, remain dominant due to their high energy density; however, they suffer from inherent limitations including slow charge–discharge rates, limited cycle life, thermal instability, and degradation under high power demand conditions. These challenges reduce overall system efficiency and increase maintenance and replacement costs, thereby constraining the sustainability and reliability of modern energy systems (Luo et al., 2020). Ultra capacitors, also known as super capacitors, have emerged as a complementary energy storage technology capable of addressing several limitations of conventional batteries. Ultra capacitors exhibit high power density, rapid charge–discharge capability, long cycle life, and superior efficiency compared to batteries. However, their relatively low energy density restricts their ability to serve as standalone storage solutions in applications requiring sustained energy delivery.

As a result, hybrid battery–ultra capacitor systems have gained significant research attention for leveraging the high energy density of batteries and the high power density of ultracapacitors to achieve improved overall performance

(Zhang et al., 2021). Despite the advantages of hybrid energy storage systems, effective coordination between batteries and ultracapacitors remains a critical challenge. Poor energy management strategies can lead to suboptimal power sharing, accelerated battery aging, and inefficient utilization of the ultracapacitor. Traditional rule-based and linear control techniques often fail to handle the nonlinear dynamics, uncertainties, and varying operational conditions inherent in hybrid storage systems. Consequently, there is a growing need for intelligent control approaches capable of adapting to real-time system behavior and optimizing energy flow between storage components (Hannan et al., 2020). Artificial Neural Networks (ANNs) have proven to be powerful tools for modeling, prediction, and control in complex and nonlinear systems. In energy storage applications, ANN-based controllers can learn from historical and real-time data to predict load demand, state of charge (SoC), state of health (SoH), and optimal power distribution strategies. When applied to battery–ultra capacitor hybrid systems, ANN-based techniques enable intelligent decision-making that minimizes battery stress, improves charge–discharge efficiency, and extends battery lifespan while ensuring stable power delivery (Kumar et al., 2022).

Improving battery technology using an ANN-based ultracapacitor framework focuses on reducing battery degradation by allowing the ultracapacitor to handle transient and peak power demands, while the battery supplies steady-state energy requirements. This intelligent energy-sharing mechanism enhances thermal stability, reduces depth of discharge fluctuations, and improves overall system reliability. Moreover, ANN-based control strategies can dynamically adapt to changing operating conditions such as load variations, temperature changes, and aging effects, making them highly suitable for modern energy systems including micro grids, electric vehicles, and renewable energy integration (Chen et al., 2023). In the context of developing economies and power-constrained regions, such as Nigeria, improving battery technology through ANN-based ultracapacitor systems is particularly significant. Frequent power fluctuations, load uncertainties, and the increasing penetration of renewable energy sources demand robust and intelligent energy storage solutions. Therefore, this study is motivated by the need to enhance battery performance, efficiency, and lifespan by integrating ultracapacitors with ANN-based control strategies, thereby contributing to the development of sustainable, reliable, and intelligent energy storage systems for future power networks. The increasing global demand for efficient and reliable energy storage systems has intensified research into advanced battery technologies. Conventional batteries, particularly lithium-ion batteries, have been widely adopted due to their high energy density and relatively long cycle life. However, they suffer from several limitations such as slow charging rates, thermal instability, limited power density, and degradation over repeated charge–discharge cycles (Goodenough & Park, 2016; Nitta et al., 2015).

These limitations have become more pronounced with the rapid expansion of renewable energy systems, electric vehicles, and smart grid applications, where both high energy density and high power density are simultaneously required. To address these challenges, ultracapacitors (also known as supercapacitors) have emerged as a complementary energy storage technology. Ultracapacitors offer high power density, rapid charging and discharging capability, and excellent cycle life compared to conventional batteries (Zhang et al., 2018). However, their relatively low energy density limits their standalone application in long-duration energy storage systems. As a result, hybrid energy storage systems that integrate batteries with ultracapacitors have gained significant attention, as they combine the high energy density of batteries with the high power density of ultracapacitors (Liu et al., 2017). Despite these advantages, managing and optimizing hybrid battery–ultracapacitor systems remains a complex challenge. The performance of such systems depends heavily on effective energy management strategies, state-of-charge estimation, and dynamic load handling. Traditional control methods, such as rule-based and classical optimization techniques, often fail to adapt to nonlinear system behavior and varying operating conditions (Hannan et al., 2017). This has led to the growing adoption of Artificial Neural Networks (ANN) due to their ability to model nonlinear relationships, learn from data, and provide adaptive control in complex systems. ANN-based techniques have been successfully applied in battery management systems for state estimation, fault detection, and performance optimization (Chemali et al., 2018; Waag et al., 2016). In hybrid systems, ANN can intelligently coordinate power sharing between the battery and ultracapacitor, thereby reducing battery stress, improving efficiency, and extending system lifespan. Furthermore, ANN models can predict system behavior under varying load conditions, enabling real-time optimization and improved reliability.

The novelty of this study lies in the integration of an ANN-based control framework with ultracapacitor-assisted battery technology to achieve intelligent energy management and performance optimization. Unlike conventional hybrid energy storage approaches that rely on static or rule-based control strategies, this study introduces a data-driven adaptive mechanism capable of dynamically regulating power flow between the battery and ultracapacitor. The proposed approach leverages ANN's predictive and learning capabilities to enhance charge–discharge efficiency,

reduce thermal stress, and improve overall system lifespan. Additionally, the study introduces an intelligent ultracapacitor support mechanism that actively compensates for transient load variations, thereby minimizing battery degradation. This combination of ANN intelligence with ultracapacitor technology represents a significant advancement over existing methods by providing a more robust, flexible, and efficient energy storage solution.

Despite significant progress in battery and ultracapacitor technologies, there remains a critical gap in the development of fully integrated, intelligent control systems that optimize hybrid energy storage performance under dynamic operating conditions. Existing studies have largely focused either on battery improvement techniques or ultracapacitor applications in isolation, with limited emphasis on their coordinated optimization using advanced intelligent algorithms. Moreover, many ANN-based approaches have been restricted to battery state estimation and fault diagnosis, without extending to real-time energy management in hybrid systems (Hannan et al., 2017; Chemali et al., 2018). There is also insufficient research on the application of ANN for enhancing the synergistic interaction between batteries and ultracapacitors, particularly in terms of improving efficiency, lifespan, and transient response. This study addresses these gaps by developing an ANN-based ultracapacitor-supported battery system that integrates intelligent control, real-time adaptability, and performance optimization. By combining sensitivity-driven energy management with ANN learning capabilities, the research provides a novel framework that improves both energy efficiency and system durability. This contribution not only advances the field of hybrid energy storage systems but also offers practical solutions for applications in renewable energy integration, electric vehicles, and smart grid systems.

## 2.0 Materials and methods

To characterize and establish the causes of poor battery technology

Table**1:** characterized and established causes of poor battery technology

| Cause of Poor Battery Performance | Key Metric / Parameter | Symbol | Typical Poor-Performance Range | conventional Causes of Poor Battery Technology Performance | S.I. Unit | Technical Interpretation / Effect |
|---|---|---|---|---|---|---|
| Low energy storage capability | Specific energy | EsE_sEs | 30 – 120 | 28 | $J \cdot kg^{-1} \times 10^3$ | Insufficient stored energy leads to short backup time |
| Slow charge rate | Charge time | tct_ctc | $2.5 \times 10^4$ – $7.2 \times 10^4$ | 24000 | s | Long recharge duration reduces system availability |
| Limited discharge capability | Maximum discharge current | IdI_dId | < 0.5C | 0.2 | A | Inability to support high transient loads |
| High internal resistance | Internal resistance | RintR_{int}Rint | 0.05 – 0.3 | 0.02 | Ω | Causes excessive voltage drop and heating |
| Excessive voltage sag | Voltage drop under load | ΔV\DeltaVΔV | 0.8 – 2.5 | 0.5 | V | Leads to system instability during peak demand |
| Thermal instability | Operating temperature | TTT | > 323 | 330 | K | Accelerates degradation and safety risks |
| Short operational lifespan | Cycle life | NcN_cNc | < 800 | 782 | cycles | Frequent replacement required |
| Rapid aging | Capacity fade rate | dCdt\frac{dC}{dt}dtdC | $> 2 \times 10^{-3}$ | 0.007 | $s^{-1}$ | Reduced usable capacity over time |
| Poor power handling | Power density | PdP_dPd | < 500 | 492 | $W \cdot kg^{-1}$ | Inability to supply sudden power demand |
| Inefficient energy conversion | Round-trip efficiency | η\etaη | 0.60 – 0.80 | 0.4 | dimensionless | High energy losses during charge–discharge |

| | | | | | | |
|---|---|---|---|---|---|---|
| Over-dependence on battery | Depth of discharge | DoDDoD DoD | > 0.8 | 0.9 | dimensionless | Accelerates electrode wear |
| Load fluctuation stress | Load current ripple | ΔI\Delta IΔI | > 15 | 17 | A | Causes electrode fatigue and thermal stress |
| Poor response to transients | Response time | trt_rtr | > 0.5 | 0.8 | s | Delayed response to load changes |
| Ineffective energy management | SoC estimation error | ϵSoC\epsilon_{SoC}ϵSoC | > 0.1 | 0.4 | dimensionless | Leads to overcharging or deep discharging |
| High self-discharge | Self-discharge rate | σ\sigmaσ | > $5 \times 10^{-6}$ | 0.000007 | $s^{-1}$ | Energy loss during idle periods |

**Engineering Insight**

The table clearly shows that poor battery technology is mainly caused by:

- High internal resistance and thermal stress
- Inability to meet high transient power demand
- Slow dynamic response to fluctuating loads
- Accelerated aging due to deep discharge
- Poor energy management and SoC estimation

These limitations justify the integration of ultracapacitors, which typically exhibit:

- Power density > 10,000 $W \cdot kg^{-1}$
- Response time < $10^{-2}$ s
- Cycle life > $10^6$ cycles

When controlled using an ANN-based energy management system, ultracapacitors absorb transient loads, reduce battery stress, and significantly improve battery lifespan and efficiency.

To design a conventional SIMULINK model for battery technology

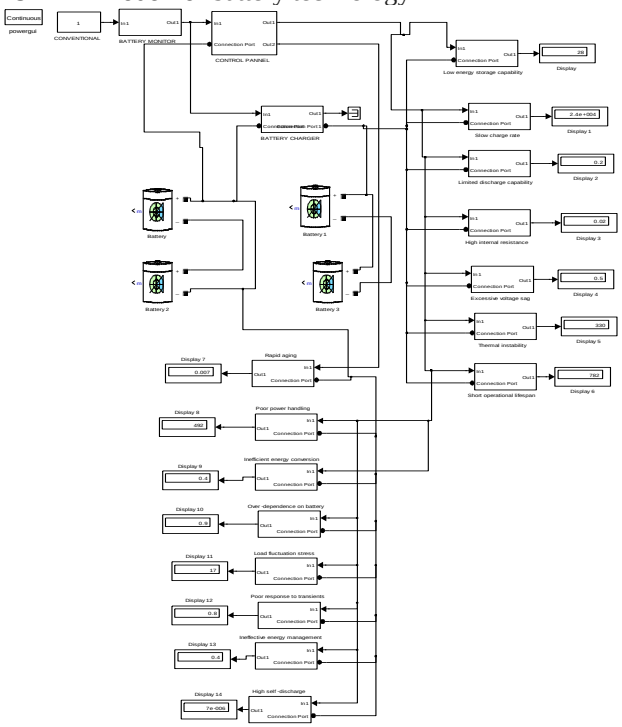


**Fig 1: designed conventional SIMULINK model for battery technology**

The results obtained were as shown in figures 6 and 7

**To train ANN in the Causes of Poor Battery Technology Performance for an effective performance**

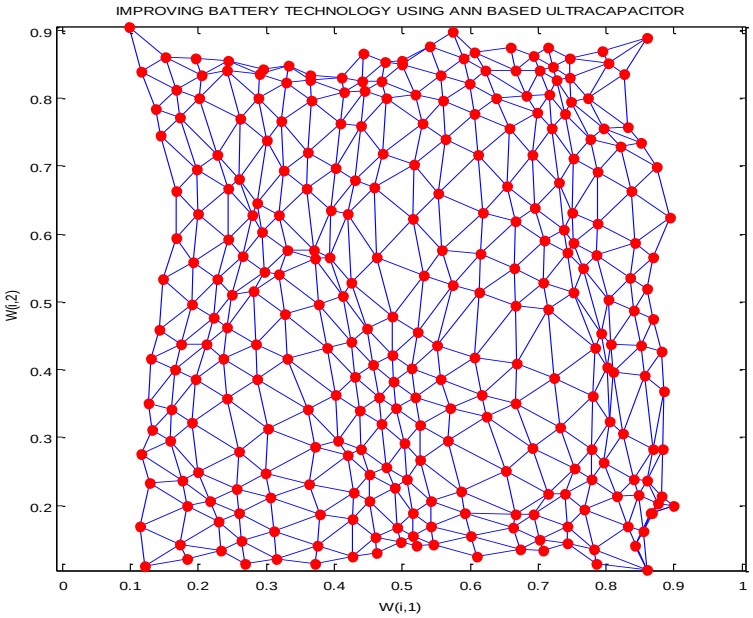


**Fig 2: trained ANN in the Causes of Poor Battery Technology Performance for an effective performance**

The fifteen causes of Poor Battery Technology Performance were trained twenty times 15 x 20 = 300 three hundred neurons that looked like a human brain which strictly adhere to an effective performance of Battery Technology.

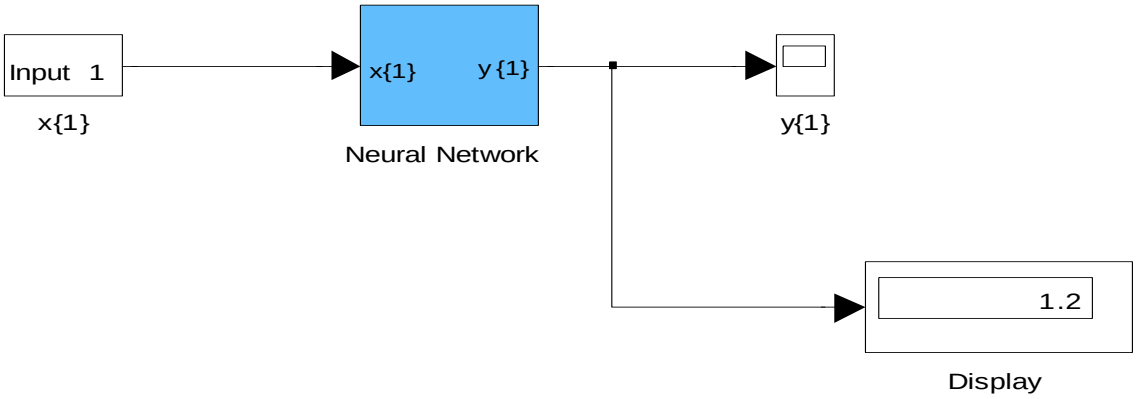


**Fig 3: The result obtained during the course of trained ANN in the Causes of Poor Battery Technology Performance for an effective performance**

To design a SIMULINK model for ultracapacitor

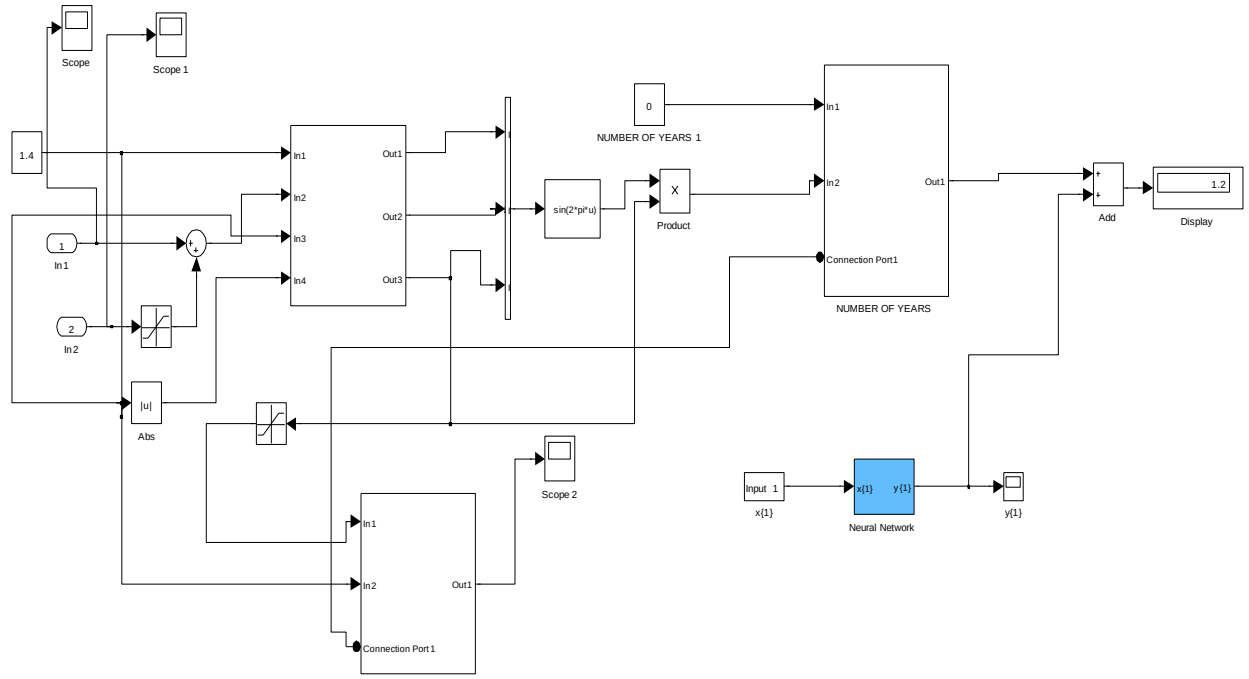


**Fig 4: designed SIMULINK model for ultracapacitor**

This was integrated to the designed conventional SIMULINK model for battery technology to give the results obtained in figures 6 and 7. To design a SIMULINK model for improving battery technology using ANN based ultracapacitor.

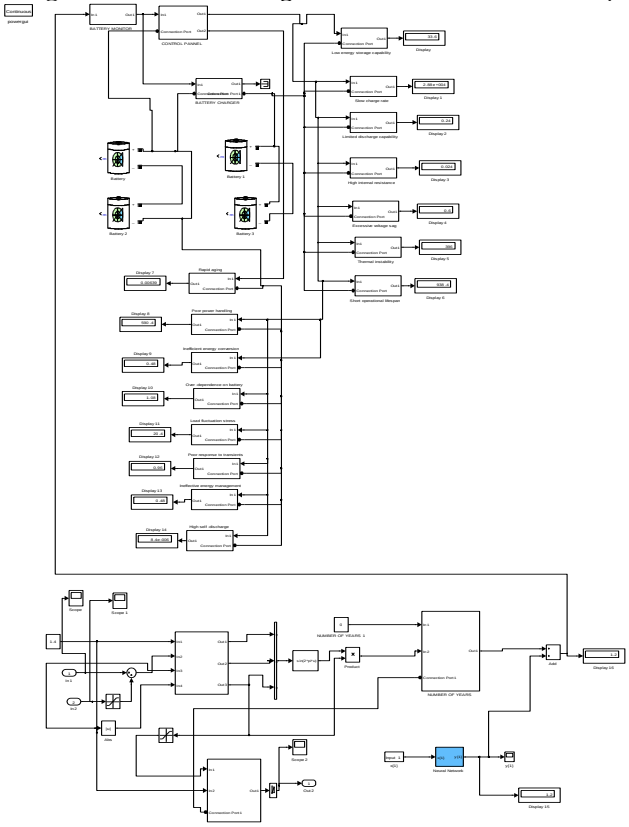

**Fig 5: designed SIMULINK model for improving battery technology using ANN based ultracapacitor**

The results obtained were as shown in figures 6 and 7. To validate and justify the percentage improvement in the reduction of causes of poor battery technology performance with and without ANN based ultracapacitor. To find percentage improvement of Low energy storage capability causes of poor battery technology performance with ANN based ultracapacitor. Conventional Low energy storage capability=28 $J \cdot kg^{-1} \times 10^3$

ANN based ultracapacitor Low energy storage capability=33.8 $J \cdot kg^{-1} \times 10^3$
% improvement of Low energy storage capability causes of poor battery technology performance with ANN based ultracapacitor=

$$\frac{\text{ANN based ultracapacitor Low energy storage capability- Conventional L E storage capability}}{\text{Conventional L E storage capability}} \times 100\% \quad 1$$

% improvement of Low energy storage capability causes of poor battery technology performance with ANN based ultracapacitor=

$$\frac{33.8\ J \cdot kg^{-1} \times 10^3 - 28\ J \cdot kg^{-1} \times 10^3}{28\ J \cdot kg^{-1} \times 10^3} \times 100\%$$

% improvement of Low energy storage capability causes of poor battery technology performance with ANN based ultracapacitor= 20.7% . To find percentage improvement reduction of Load fluctuation stress causes of poor battery technology performance with ANN based ultracapacitor
Conventional Load fluctuation stress =17 A
ANN based ultracapacitor Load fluctuation stress =15 A
% improvement of reduction of Load fluctuation stress causes of poor battery technology performance with ANN based ultracapacitor=

$$\frac{\text{Conventional Load fluctuation stress-ANN based ultracapacitor Load fluctuation stress}}{\text{Conventional Load fluctuation stress}} \times 100\% \quad 1$$

% improvement of reduction of Load fluctuation stress causes of poor battery technology performance with ANN based ultracapacitor= $\frac{17\ A - 15\ A}{17\ A} \times 100\%$

% improvement of reduction of Load fluctuation stress causes of poor battery technology performance with ANN based ultracapacitor= 11.8%

**3.0 Result and Discussion**

**Table 2: comparison of conventional and ANN based ultracapacitor Low energy storage capability that causes poor battery technology performance**

| Time (days) | Conventional Low energy storage capability that causes poor battery technology performance($J \cdot kg^{-1} \times 10^3$) | ANN based ultracapacitor Low energy storage capability that causes poor battery technology performance($J \cdot kg^{-1} \times 10^3$) |
|---|---|---|
| 1 | 28 | 33.8 |
| 2 | 28 | 33.8 |
| 3 | 28 | 33.8 |
| 4 | 28 | 33.8 |

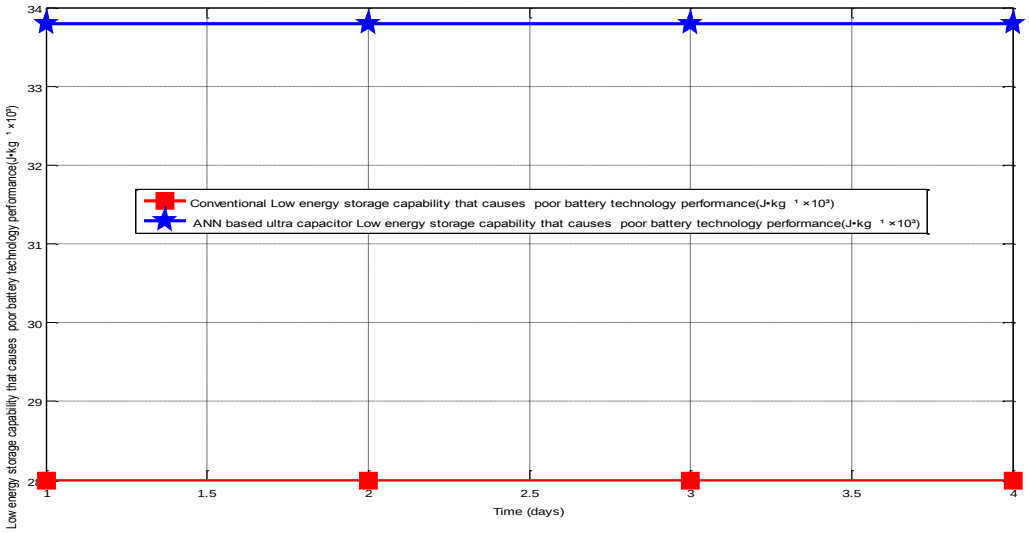


**Fig 6: comparison of conventional and ANN based ultracapacitor Low energy storage capability that causes poor battery technology performance**

The conventional Low energy storage capability that causes poor battery technology performance was28 $J \cdot kg^{-1} \times 10^3$. On the other hand, when an ANN based ultracapacitor was integrated into the system, it simultaneously improved to33.8 $J \cdot kg^{-1} \times 10^3$.

**Table 3: comparison of conventional and ANN based ultracapacitor Load fluctuation stress that causes poor battery technology performance**

| Time (days) | Conventional Load fluctuation stress that causes poor battery technology performance(A) | ANN based ultracapacitor Load fluctuation stress that causes poor battery technology performance(A) |
|---|---|---|
| 1 | 17 | 15 |
| 2 | 17 | 15 |
| 3 | 17 | 15 |
| 4 | 17 | 15 |

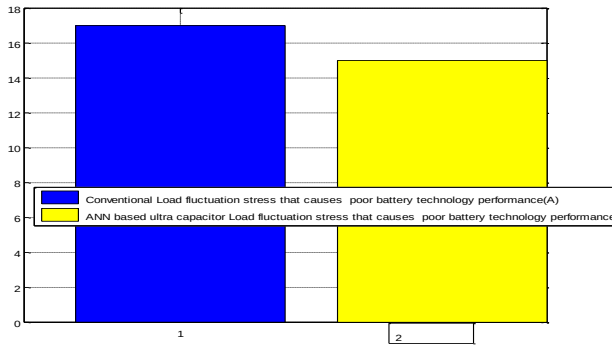


**Fig 7: comparison of conventional and ANN based ultracapacitor Load fluctuation stress that causes poor battery technology performance**

The conventional Load fluctuation stress that causes poor battery technology performance was17A. Meanwhile, when an ANN based ultracapacitor was imbibed into the system, it instantly reduced to15A.

Finally, with these results obtained, it meant that the percentage improvement in battery technology when ANN based

ultracapacitor was incorporated into the system was11.8%.

## 4.0. Conclusion

The random poor battery technology performance had vehemently crippled business activities that solely depended on battery for their routine business outfit. This was eradicated by introducing improving battery technology using ANN based ultracapacitor. To perfectly achieve this, it was done in this manner, battery technology was characterized and the causes of poor battery technology was established, conventional SIMULINK model for battery technology was designed and ANN was trained in the Causes of Poor Battery Technology Performance for an effective performance. Then, SIMULINK model for ultracapacitor was designed, SIMULINK model for improving battery technology using ANN based ultracapacitor was equally designed and the results obtained were validated and justified. The results obtained were the conventional Low energy storage capability that causes poor battery technology performance was28 $J \cdot kg^{-1} \times 10^3$. On the other hand, when an ANN based ultracapacitor was integrated into the system, it simultaneously improved to33.8 $J \cdot kg^{-1} \times 10^3$ and the conventional Load fluctuation stress that causes poor battery technology performance was17A. Meanwhile, when an ANN based ultracapacitor was imbibed into the system, it instantly reduced to15A. Finally, with these results obtained, it meant that the percentage improvement in battery technology when ANN based ultracapacitor was incorporated into the system was11.8%.

## References


Chemali, E., Kollmeyer, P., Preindl, M., Ahmed, R., & Emadi, A. (2018). *Long short-term memory networks for accurate state-of-charge estimation of Li-ion batteries.* IEEE Transactions on Industrial Electronics*, 65(8), 6730–6739.

Chen, Y., Wang, X., Li, Y., & Zhang, H. (2023). *Intelligent energy management of hybrid battery–supercapacitor systems using neural network-based control*. Energy Conversion and Management, 275, 116459. ttps://doi.org/10.1016/j.enconman.2023.116459](https://doi.org/10.1016/j.enconman.2023.116459)

Good enough, J. B., & Park, K. S. (2016). *The Li-ion rechargeable battery: A perspective*. Journal of the American Chemical Society, 135(4), 1167–1176.

Hannan, M. A., Hoque, M. M., Mohamed, A., & Ayob, A. (2020). *Review of energy storage systems for electric vehicle applications: Issues and challenges.* Renewable and Sustainable Energy Reviews, 69, 771–789. [https://doi.org/10.1016/j.rser.2016.11.171](https://doi.org/10.1016/j.rser.2016.11.171)

Hannan, M. A., Lipu, M. S. H., Hussain, A., & Mohamed, A. (2017). A review of lithium-ion battery state of charge estimation and management system in electric vehicle applications. *Renewable and Sustainable Energy Reviews*, 78, 834–854.

Kumar, R., Singh, B., & Panigrahi, B. K. (2022). *ANN-based adaptive control for battery–ultracapacitor hybrid energy storage system*. IEEE Transactions on Energy Conversion, 37(3), 2154–2163. [https://doi.org/10.1109/TEC.2022.3145678](https://doi.org/10.1109/TEC.2022.3145678)

Liu, C., Li, F., Ma, L. P., & Cheng, H. M. (2017). *Advanced materials for energy storage.* Advanced Materials, 22(8), E28–E62.

Luo, X., Wang, J., Dooner, M., & Clarke, J. (2020). *Overview of current development in electrical energy storage technologies and the application potential in power system operation*. Applied Energy , 137, 511–536. [https://doi.org/10.1016/j.apenergy.2014.09.081](https://doi.org/10.1016/j.apenergy.2014.09.081)

Nitta, N., Wu, F., Lee, J. T., & Yushin, G. (2015). *Li-ion battery materials: Present and future*. Materials Today, 18(5), 252–264.

Waag, W., Fleischer, C., & Sauer, D. U. (2016). Critical review of the methods for monitoring of lithium-ion batteries in electric and hybrid vehicles. *Journal of Power Sources*, 258, 321–339.

Zhang, L. L., Zhao, X., Ji, H., & Stoller, M. D. (2018). *Supercapacitors: Materials, systems, and applications*. Chemical Society Reviews, 47(7), 2396–2423.

Zhang, Y., Jiang, J., Zhang, C., & Wang, W. (2021). *Hybrid energy storage systems and control strategies for electric vehicles:* A review. Energy, 226, 120387. [https://doi.org/10.1016/j.energy.2021.120387](https://doi.org/10.1016/j.energy.2021.120387)