UJEAS

UNIZIK JOURNAL OF ENGINEERING AND APPLIED SCIENCES

UNIZIK Journal of Engineering and Applied Sciences 3(4), September (2024), 1245 - 1256
Journal homepage: https://journals.unizik.edu.ng/index.php/ujeas
PRINT ISSN: 2992-4383 || ONLINE ISSN: 2992-4391

Evaluation of the Bonding Performance of Polyurethane (PUR) and Epoxy Resin (ER) Adhesives with *Gmelina Arborea* Timber Using Different Testing Methods

Yau Y*, Ocholi A, Kaura J. M and Lawan A

Department of Civil Engineering, Ahmadu Bello University, Zaria, Nigeria.

*Corresponding Author's E-mail: yyilyas@gmail.com, yyau@abu.edu.ng

Abstract
This study investigates the bonding performance of Polyurethane (PUR) and Epoxy Resin (ER) adhesives using *Gmelina arborea* wood. The objectives are to determine the shear strength of PUR and ER adhesives using different testing methods (ASTM-D5868, ASTM-D905, and EN 302-1) and conditions (dry, soak, and heat), analyze the influence of gluing parameters on bond strength, and assess adhesive penetration at the wood-adhesive interface using Scanning Electron Microscopy (SEM). Results indicate that shear strength values ranged from 2.19 N/mm^2 to 4.87 N/mm^2 for ER adhesive and from 2.27 N/mm^2 to 5.16 N/mm^2 for PUR adhesive. For timber adhesives**,** industry standards provide guidelines for acceptable bonding performance. The values obtained (2.19 N/mm^2 to 4.87 N/mm^2 for ER, 2.27 N/mm^2 to 5.16 N/mm^2 for PUR) fall within a reasonable range for adhesives used in timber bonding. Notably, the PUR adhesive exhibited higher shear strength, with the EN 302-1 standard yielding higher strength values than the ASTM standards. Previous studies have shown that PUR adhesives typically exhibit good mechanical performance. Findings in this study are consistent with this trend, where the PUR adhesive achieved higher shear strength. SEM analysis revealed that PUR adhesive achieved a well-penetrated and uniform bond with the wood fibres, while ER adhesive showed a more heterogeneous bond with varying roughness. The heterogeneous bond observed in SEM analysis matches previous studies.

Keywords: Bond line, Adhesive penetration, Shear strength, Scanning electron microscopy, Analysis of variance

1. Introduction

Adhesives have become essential in the manufacturing of wood products, today, many wood products are created by gluing or bonding pieces together. This technique enables wood to be used in applications that would otherwise be impossible. For example, adhesives make it feasible to construct large structural components, like the glulam frameworks found in many buildings, which would be impractical to produce without such bonding (Frihart et al., 2020). Experimental techniques have been used to research the performance of bond lines (Song et al., 209 & Purba et al., 2022) and microscopic examination (SEM and TEM) to initiate and understand the relationships affecting the bond effectiveness. Numerous methods exist for assessing the performance of bonded assemblies (Sikora et al., 2016). These testing procedures are typically outlined in several standards, including those from ASTM, EN, and ISO. Among the various adhesives available, Polyurethane (PUR) and Epoxy Resin (ER) are frequently used in mass timber production.

The ongoing rise in the use of mass timber products (MTPs) such as Cross-laminated timber (CLT), Laminated veneer lumber (LVL), and glulam in tall timber structures necessitates a thorough comprehension of the functions of adhesive and how effectively they perform over time on those products about the type of loading applied, environmental effects and in-service condition of elements (Shirmohammadi & Leggate, 2021). Assessing the bond strength of wood adhesives is a routine task in the quality control labs of many MTP manufacturing companies. As

MTPs continue to evolve rapidly, there is a growing need to establish more precise and dependable product-specific testing methods to determine the suitability of wood adhesives for various products and applications (Derikvand & Fink, 2020).

The timber species used in this study is *Gmelina arborea*, a hardwood species that can grow up to 35 meters in height and over 3 meters in diameter in its natural habitats within tropical and subtropical regions. Around 53 years ago, extensive plantations of *Gmelina arborea* were established primarily in southern Nigeria, intended as a potential source of pulp wood for the paper industry (Iwuaha et al., 2021). Although Gmelina has significant potential as a valuable material for the future, its current uses have largely been confined to paper and pulp production, furniture making, door paneling, and modeling.

Previous research exploring the performance of adhesives includes the work of Luo et al. (2022) who investigated the mechanical performance and water resistance of polyurethane adhesives used in wood bonding. The researchers found that PUR adhesives demonstrated excellent adhesion properties and maintained high shear strength after water immersion. Shear strength values typically ranged between 2.5 N/mm^2 and 6.0 N/mm^2, depending on wood type and adhesive composition. Mo et al. (2021) analyzed the long-term durability of PUR adhesives in timber-concrete composite structures. The findings revealed that PUR adhesives had strong mechanical properties, especially in wet conditions. The shear strength values ranged from 3 N/mm^2 to 5.5 N/mm^2, and the bonding performance showed less degradation compared to other adhesives when exposed to moisture. The study also highlighted that PUR adhesives maintain flexibility, which is critical for accommodating the movement of timber in fluctuating environmental conditions. In a study to evaluate the performance of epoxy resin adhesives in timber joints subjected to cyclic loading and high-temperature environments, Liu et al. (2020) found that while epoxy resin adhesives provided high initial shear strength (ranging from 4 N/mm^2 to 6 N/mm^2), their performance under high-temperature conditions degraded significantly.

The adhesive's bond was more heterogeneous, and the SEM analysis showed reduced penetration and bond uniformity, particularly after thermal exposure. Also, an in-depth study on the bonding performance of epoxy adhesives in structural wood joints under different moisture levels, showed that ER adhesives had variable shear strength values depending on moisture exposure. While dry conditions resulted in shear strengths of 3.5 N/mm^2 to 5.2 N/mm^2, the strength dropped significantly in wet conditions due to poor penetration of the adhesive into the wood fibers (Xie et al., 2021). A review by Stoeckel et al. (2020), highlighted that polyurethane adhesives generally exhibit higher shear strength under various environmental conditions, especially when tested with EN 302-1, due to the test's specific criteria for bonding strength in wood materials. The study noted that EN 302-1 tends to yield higher values than ASTM standards, as it is designed for structural applications. Comparatively, epoxy resin adhesives were found to be more sensitive to environmental conditions, particularly temperature and moisture, which could reduce their bonding uniformity and strength.

The uniqueness and distinctiveness of this study lies in its comprehensive evaluation of the bonding performance of polyurethane (PUR) and epoxy resin (ER) adhesives using *Gmelina arborea*, a locally grown timber species in Nigeria, under various testing conditions and methods. While *Gmelina arborea* has been widely used for general timber applications, its potential for engineered wood products, such as cross-laminated timber (CLT) and glulam, has not been thoroughly explored, particularly in the context of adhesive bonding. This study uniquely combines multiple testing standards (EN 302-1, ASTM-D5868, and ASTM-D905) and evaluates adhesive performance across different environmental conditions (dry, soaked, heated), providing a more in-depth understanding of how adhesives perform under real-world conditions. Additionally, the use of scanning electron microscopy (SEM) to assess the microstructural bonding characteristics of PUR and ER with Gmelina represents a novel approach in the context of Nigerian timber species, contributing new insights to adhesive behavior at the microscopic level.

Despite Nigeria's extensive timber resources with a variety of species, there is a significant research gap in the development of value-added engineered wood products, such as cross-laminated timber (CLT) and glulam, using local timber species. Arum et al. (2021) highlighted the lack of sufficient data in both literature and practice to support the use of Nigerian-grown timber for these products. Specifically, the bonding performance of adhesives using *Gmelina arborea***,** a locally grown species, has not been extensively evaluated. While the global adoption of CLT is on the rise, its application in Nigeria remains limited due to the absence of comprehensive research on local species suitable for CLT production. Furthermore, most studies tend to focus on a narrow range of testing conditions, often limited to dry and soaked states, whereas a broader evaluation, including different methods and testing conditions such as heat, is necessary to fully understand adhesive performance. This research aims to fill these gaps

by evaluating multiple testing conditions and methods and offering valuable data on the bonding capabilities of an under-researched timber species in the context of engineered wood products, potentially broadening the use of local resources in advanced timber applications. This study aims to evaluate the bonding performance of polyurethane (PUR) and epoxy resin (ER) adhesives with *Gmelina arborea* timber grown in Nigeria, focusing on various testing methods and conditions. The objectives of the study were as follows:

- To determine the shear strength and durability of PUR and ER adhesive bonds with *Gmelina arborea* timber under different testing conditions and using multiple methods.
- To evaluate and analyze the impact of gluing parameters on the strength of the adhesive bonds formed with PUR and ER adhesives.
- To assess the penetration and bonding uniformity of the adhesives through SEM analysis.

2.0 Material and methods

2.1 Material

Timber: The timber used in this study was sourced from *Gmelina arborea* trees located in a forest in Kachia LGA, southern Kaduna state, Nigeria, specifically in Jaban Kogo, Sabon Sarki, at latitude 9° 39' 21" N and longitude 8° 5' 11" E. The Gmelina timber has an average density and green moisture content (MC) of 505 kg/m^3 and 141 % respectively. The timber was classify as C30 according to BS EN 338 specification. All test specimens were produced from visually graded planks or lumbers (with different cross-sectional) sawn from this timber specie (Fig. 1).



Figure 1: Lumbers sawn from *Gmelina arborea* timber specie

The material properties of the lumber boards used in this research are presented in Table 1, which were determined in accordance to ASTM-D198-14 and BS EN 408. As shown in Table 1, *Gmelina arborea* is classified as a medium-density species, with an average density of 528 kg/m³. Its bending strength is comparable to its tensile strength, indicating a balanced performance in both bending and tensile applications.

Table 1: Properties of *Gmelia arborea* lumber boards

M C	Density	Bending Strength	Compressive Strength (‖)	Compressive Strength (⊥)	Tensile Strength	Shear Strength
11.80%	528 kg/m^3	52.86 N/mm^2	35.8 N/mm^2	5.9 N/mm^2	63.7 N/mm^2	7.65 N/mm^2

Adhesives: Two commercial adhesives, One-component Polyurethane (PUR). This adhesive (FV1KPUR1.1KGBTE716A) was manufactured by Pidilite Industries Ltd. According to the specifications for "DIN EN 204/D4" and as per "WATT91" provided by the manufacturer, the product is boiling water and high temperature resistant respectively. It reaches final bond strength after 24hours. Two-component Epoxy Resin (ER) adhesives (SUA–8714), which is 100% synthetic resin. It is resistant to heat, water, oil, acid and alkali according to the manufacturer. The initial curing time is 90min, and subsequently reaches maximum strength after 24hours.

Clamping Device: A fabricated manual clamping device for mounting pressure on the bonding specimens was used in this study. The clamping device, also referred to as a pressing device**,** is used to press pieces of wood together after adhesive application. The improvised device shown in Fig. 2 was used as an alternative to a vacuum or hydraulic press. However, for bonding large-scale specimens**,** a vacuum or hydraulic press is preferred. According to BS EN 302-1, a manual pressing device is acceptable for use with small-scale specimens.



Figure 2: Improvised clamping device for pressure application

2.2 Methods

2.2.1 Samples preparation

The *Gmelina arborea* logs were cut from the bottom, middle, and top sections of the tree, using a power saw to ensure a comprehensive representation of the tree's properties. The logs were transported to the Department of Civil Engineering, cut to structural sizes, and conditioned at 20°C and 65% relative humidity for approximately 15 weeks. The lumbers were first cut at 15% moisture content (MC) to the reference sizes, then further conditioned to 12% MC. A sufficient number *Gmelina arborea* lumbers were sawn and planed to cross-section of 5 mm x 30 mm, 20 mm x 55 mm, and 5 mm x 20 mm for preparing test specimen for BS EN 302-1, ASTM-D905-8 and ASTM-D5868 test methods respectively. The boards are grouped into 3 groups based on testing criterion for each testing methods. Adhesives are applied as specified by the manufacturer recommendations. After curing, the specimen were further planed to the desired dimensions as shown in Figure 3. The shear areas for BS EN 302-1, ASTM-D905-8 and ASTM-D5868 specimens are 600 mm^2, 1900 mm^2 and 200 mm^2 respectively. A Total number of 162 specimens, 54 for each testing methods were prepared. For each testing method, 18 sample are soak in water for 24hr, 18 are placed in oven under constant temperature of 150°C for 24hr and the remaining 18 are untreated (control samples).

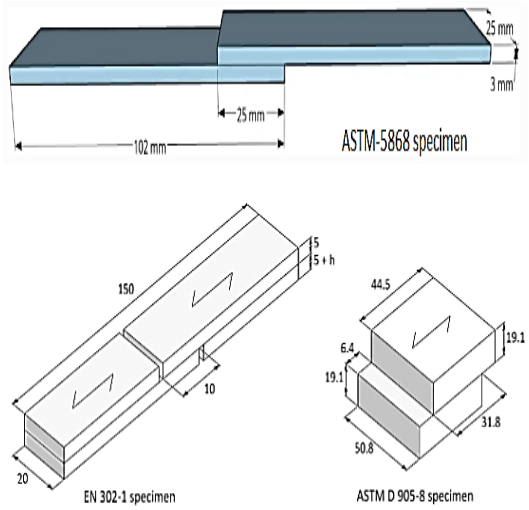

Figure 3: The configuration and dimensions of test specimens for the different standards

2.2.2 Experimental methods for testing shear strength in wood-adhesive bond

The three different test methods used for testing shear strength in wood-adhesive bond in this research are: ASTM-D5868, ASTM-D905 (both American standards) and EN 302-1 (European standard). ASTM-D5868 method uses single-lap joint to assess the adhesion strength. This standard is based on tension criterion. The ASTM-D905 test method, developed by the American Society for Testing and Materials, is utilized to assess the shear strength of

wood adhesive bonds through compressive loading. EN 302-1, is European standard for determining the strength in longitudinal shear of adhesive bond. The shear stress must be induced on the adhesive line by tensile force. The configuration and dimensions of the ASTM-D5868, ASTM-D905 and EN 302-1 specimens are shown in Figure 3. ASTM-D5868 and EN 302-1 testing methods which are based on tension criterion, were conducted in the laboratory of Department of Metallurgical and Material Engineering, ABU, Zaria, using an electronic universal testing machine with 100 kN capacity. The maximum load that causes shear failure and the percentage elongation after fracture (EAF %) were recorded for the evaluation of shear strength and ductility or brittleness of the adhesive used respectively. However, ASTM-D905 which is based on compression criterion, was conducted in the Structural laboratory, in the Department of Civil Engineering, ABU, Zaria, using a universal compression machine with a capacity of 250 tons. The maximum load divided by the shear area gives the shear strength of the adhesives.

The experimental data were analyzed using statistical methods available in Microsoft Excel to calculate the mean, standard deviation, and coefficient of variation (CoV) for each dataset. Additionally, box and whisker plots were employed to identify the quartile values for each dataset. An analysis of variance (ANOVA) was also conducted to determine whether there were any significant differences between the results obtained from different methods and testing criteria, as well as between the adhesives used.

2.2.3 Adhesive penetration and visualization of adhesive bonds using Electron Microscopy

Scanning electron microscopy (SEM) technique was successfully employed to study adhesive penetration in *Gmelina arborea* samples. The results are analysed base on surface features and topology, adhesive distribution and penetration, bond integrity and uniformity, and interfacial bonding.

3.0 Results and Discussions

3.1 Shear strength of bond lines with PUR and ER adhesives

Table 2 presents the mean values of shear strength for samples manufactured with different configurations (methods), testing criteria (conditions) and pressing durations (clamping periods). The shear strength result ranges from 2.19 N/mm^2 to 4.87 N/mm^2 and 2.24 N/mm^2 to 5.16 N/mm^2 for ER and PUR adhesive glue lines respectively.

Table 2: Shear strength (N/mm^2) for different test method, condition and duration of pressing

Adhesive type	Pressing duration (Hr)	ASTM-D5868			ASTM-D905			EN 302-1		
		Dry	Wet	Heat	Dry	Wet	Heat	Dry	Wet	Heat
PUR	6	3.14	2.83	2.38	3.26	2.43	2.61	4.70	4.63	2.24
PUR	12	3.14	2.82	2.42	3.27	2.41	2.67	4.87	4.82	2.47
PUR	24	3.94	3.67	3.59	3.38	3.16	3.22	5.16	5.15	2.93
ER	6	3.35	3.36	2.54	2.89	2.74	2.53	3.87	3.48	2.19
ER	12	3.64	3.46	2.87	3.32	3.25	2.96	4.79	4.53	2.32
ER	24	3.66	3.47	2.92	3.33	3.3	3.06	4.87	4.56	2.37

Different test methods resulted in significant variations in outcomes. However, shear strength results obtained by ASTM-D5868 and ASTM-D905 methods are comparable to each other, while EN 302-1 method showed higher values of strength for dry and wet conditions, but lower values of strength for heat condition. The higher strength values obtained using the EN 302-1 standard as compared to ASTM standards as can be seen in Table 2, indicate that the testing method itself can significantly influence the measured performance of adhesives. EN 302-1 focuses more on wood bonding in structural applications and may offer more rigorous testing methods, which could explain the higher shear strength values. Additionally, EN 302-1 methods is having the least shear area (200 mm^2) when compared with the shear area of ASTM-5868 (600 mm^2) and ASTM-D905 (1900 mm^2) methods respectively, this might be one of the reason for higher values of shear strength obtained by EN 302-1 methods. Similarly, ASTM-905 has lower values of shear strength compared to the other methods which might be attributed to it larger shear area.

PUR adhesives typically exhibit good mechanical performance, especially under dry and wet conditions, due to their elasticity and ability to form strong bonds with wood fibers. These findings are consistent with previous studies (Luo et al., 2022; Mo et al., 2021 and Stoeckel et al., 2020), where the PUR adhesive achieved higher shear strength**,** especially under dry and wet conditions, as compared to heat conditions. This suggests that PUR is well-suited for

environments where moisture is a factor, aligning with existing research on PUR adhesives used in wood applications. The performance of ER Adhesive appears to be more sensitive to heat, showing a significant drop in strength under heat conditions in all test methods. The variability and low shear strength observed with ER might be attributed to factors like resin thickness, bonding uniformity and interaction with wood surface, similar result was found in a study by Stoeckel et al., (2020) and Silva et al., (2015). Maximum shear strength was observed at 24hrs clamping period for all the tested glue lines, and the results were summarized and displayed in Table 3. The table presents the mean strength values (in N/mm^2) along with the standard deviation (SD) for both PUR and ER adhesives under three conditions (Dry, Soak, and Heat) using three testing methods: ASTM D5868, ASTM D905, and EN 302-1.

Table 3: Maximum Strength in N/mm^2 obtained for 24hrs clamping period

Test Method	PUR			ER		
	DRY	SOAK	HEAT	DRY	SOAK	HEAT
ASTM-D5868	3.94 (0.76)	3.67 (0.29)	3.59 (0.06)	3.66 (0.33)	3.47 (0.20)	2.92 (0.12)
ASTM-D905	3.38 (0.98)	3.16 (1.48)	3.22 (1.39)	3.33 (1.12)	3.30 (0.31)	3.06 (0.56)
EN 302-1	5.16 (0.37)	5.15 (0.40)	2.93 (0.81)	4.87 (0.14)	4.56 (0.23)	2.37 (0.31)

*Data in brackets are standard deviations

From Table 3, PUR (5.16 N/mm^2) and ER (4.87 N/mm^2) both performed best under EN 302-1. This suggests that for dry conditions, both adhesives are highly effective, but PUR offers slightly better bonding. The ASTM methods show lower strength values (around 3.94 N/mm^2 for PUR and 3.66 N/mm^2 for ER in ASTM D5868), which suggests that EN 302-1 might be more appropriate for evaluating adhesive strength in dry conditions. Both adhesives experience some reduction in strength due to soaking, but PUR (5.15 N/mm^2) still outperforms ER (4.56 N/mm^2) under EN 302-1. ASTM D5868 shows slightly lower values (3.67 N/mm^2 for PUR, 3.47 N/mm^2 for ER), indicating that moisture resistance is moderate for both adhesives, but PUR maintains superior bonding strength in wet conditions. The performance of both adhesives significantly drops under heat. The reduction is particularly severe for ER in EN 302-1, where strength drops to 2.37 N/mm^2. PUR (2.93 N/mm^2) under heat still performs better than ER, but it also experiences a sharp decline compared to dry and soaked conditions. This indicates that both adhesives struggle under heat, but PUR holds up slightly better than ER. PUR Adhesive shows relatively low standard deviation in EN 302-1, suggesting more consistent performance in bonding strength, particularly under dry and soaked conditions, while ER Adhesive exhibits more variability, especially in ASTM D905, where the SD is high, particularly under dry and heat conditions, indicating inconsistent performance.

The result for reduction in strength is presented in Figure 4. There is gradual reduction in strength from dry to wet and from wet to heat conditions. This trend applies to all the three test methods and types adhesive considered. The percentage reduction in strength for glue line tested with PUR and ER adhesive is shown in Table 4. The maximum percentage reduction in strength observed for glue lines with PUR is 6.9 % (ASTM-D5868) and the minimum percentage reduction in strength is 0.2 % (EN 302-1) from dry to soak conditions. From dry to heat condition, glue lines with PUR has a maximum of 43.2 % (EN 302-1) reduction in strength and a minimum of 4.7 % (ASTM-D905). For glue lines with ER adhesive, the maximum percentage reduction in strength is 6.4 % and 51.3 % from dry to soak and from dry to heat conditions respectively according to EN 302-1, and the minimum is 0.9 % and 8.1 % (ASTM-D905) from dry to soak and from dry to heat conditions respectively (Table 5). Considering the types of adhesive, PUR adhesive appears to have higher shear strength values than EP adhesive in all the three testing methods and testing conditions considered. According to the two American standards, PUR adhesive is more of heat resistant while ER is more of water resistant. However, the European standard showed that PUR adhesive is better than ER both in terms of heat and water resistance.

Table 4: Percentage reduction in strength from dry criterion to wet and heat criterion

Test Method	PUR		ER	
	DRY to SOAK	DRY to HEAT	DRY to SOAK	DRY to HEAT
ASTM-D5868	6.90%	8.90%	5.20%	20.20%
ASTM-D905	6.50%	4.70%	0.90%	8.1
EN 302-1	0.20%	43.20%	6.40%	51.30%

In order to assess the influence of clamping duration on the strength for all the glue line tested, the mean values of shear strength obtained from the experiments were plotted against the duration of clamping as shown in Figure 4. This plot present the results for the reference condition (dry condition) only. However, the other two conditions (soak and heat) follows the same trends, hence their plot is not shown in this study.

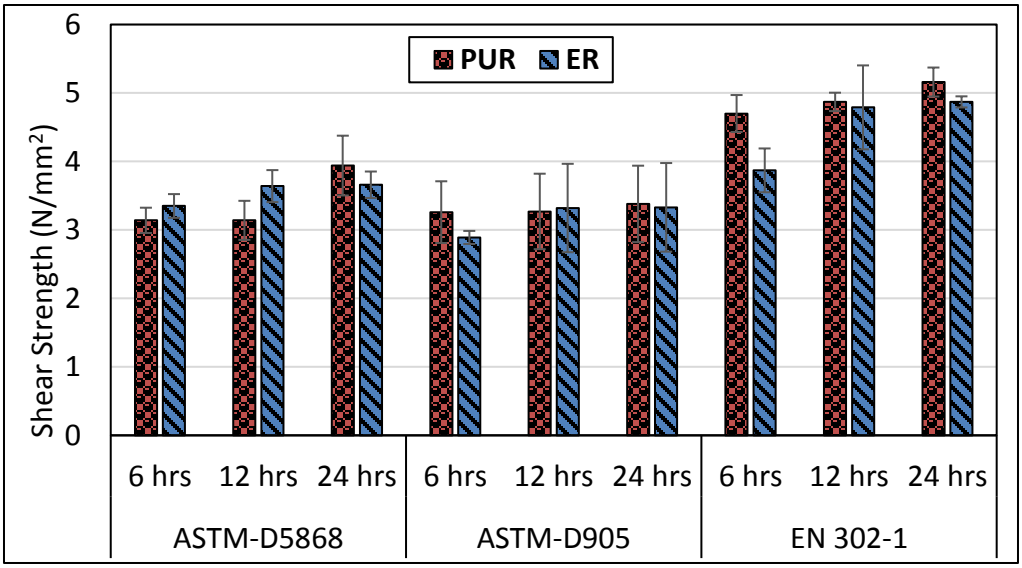

Figure 4: Mean strength obtained for dry condition with varying clamping duration

Figure 4 present the variation in strength as a result of varying the duration of clamping from 6hr to 12hr and 24hr respectively. For PUR adhesive glue lines, there is no significant difference in strength for specimens that undergo 6hr pressing and those with 12hr pressing. However, specimens subjected to 24hr clamping period showed significant difference in strength as compared to those with 6hr and 12hr. A different trend was observed for glue lines with ER adhesive. Specimens subjected to 12hr and 24hr clamping period showed no significant difference between them, but a significant difference exist between them and those specimens with 6hr clamping period. The percentage increase in strength was summarized and presented in Table 5. Moreover, a line plots as shown in Figure 5 were used to depict this trend for all the three methods and the types of adhesive considered.

Table 5: Percentage (%) increase in strength from 6-hours to 24-hours duration of pressing

Dry Criterion	**PUR**		**ER**	
	6hrs to 12hrs	6hrs to 24hrs	6hrs to 12hrs	6hrs to 24hrs
ASTM-D5868	0	25.5	8.7	9.3
ASTM-D905	0.3	3.7	14.9	15.2
EN 302-1	3.6	9.8	23.8	25.8
Soak Criterion	PUR		ER	
	6hrs to 12hrs	6hrs to 24hrs	6hrs to 12hrs	6hrs to 24hrs
ASTM-D5868	0	29.7	3	9.3
ASTM-D905	0	30	18.6	20.4
EN 302-1	4.1	11.3	30.2	31
Heat Criterion	PUR		ER	
	6hrs to 12hrs	6hrs to 24hrs	6hrs to 12hrs	6hrs to 24hrs
ASTM-D5868	1.7	50.8	13	15
ASTM-D905	2.3	23.4	17	20.9
EN 302-1	10.3	30.8	5.9	8.2

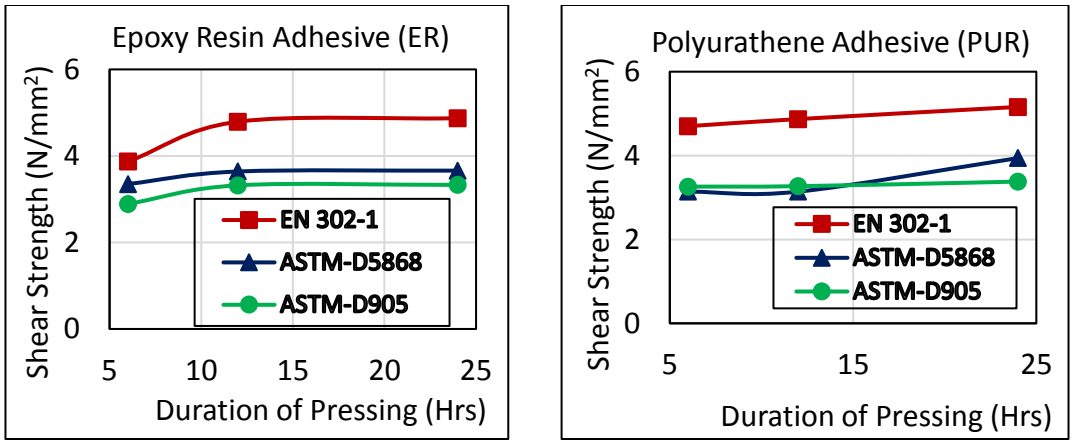

(a) (b)

Figure 5(a, b): Variation of shear strength with duration of clamping for dry (reference) condition

From Table 5 and Figure 5, it can be seen that the difference in percentage increase in strength from 6hr to 12hr and from 6hr to 24hr pressing in very large and significant for PUR adhesive glue lines for all the three conditions. However, the reverse is the case with ER adhesive glue lines. This indicates that, 12hr and 24hr pressing using the manual clamping device is sufficient and optimum to achieve maximum strength with ER and PUR adhesive respectively. From the result obtained for ASTM-D905 and EN 302-1 methods, which are based on tension loading, percentage elongation after fracture (% EAF) was used to determine the most/least brittle of the two adhesives. The mode of failure observed for both the glue lines during the test was brittle failure with less than 5 % EAF. The mean values of EAF for PUR and ER glue lines are calculated as 3.26 % and 2.78 % respectively. A material with very low elongation after fracture typically means that it exhibits brittle behavior, which suggests that the material undergoes minimal plastic deformation before fracture occurs. Therefore, PUR is said to be least brittle adhesive as compared to ER (the most brittle). In general, the shear strength seemed to be relatively dependent of the testing methods, testing criteria and duration of pressing (Figure 6a). In addition, the PUR adhesive used seemed to yield higher shear strength than the ER adhesive. The overall performance of the adhesives can be seen in the box and whisker plot shown in Figure 6b.

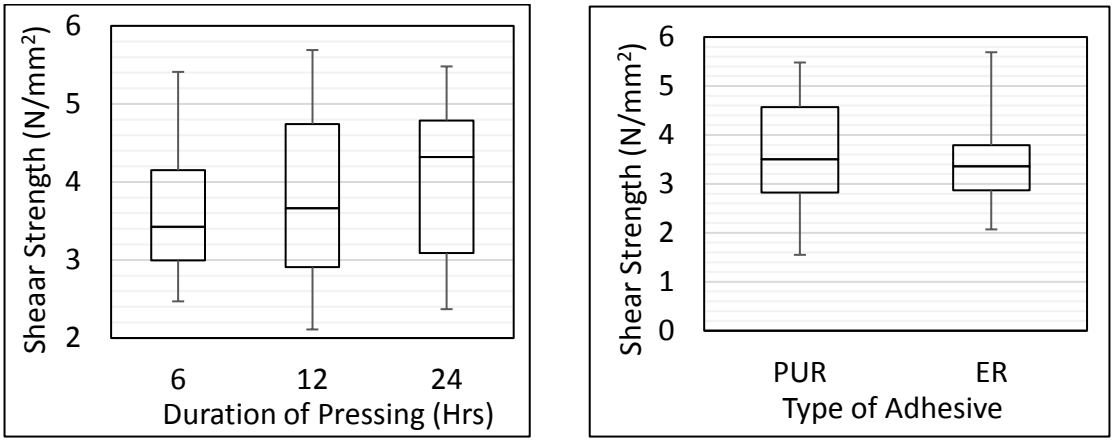

(a) (b)

Figure 6: Experimental Shear Strength versus: (a) Duration of pressing (b) Adhesive type

The ANOVA results based on the F-stat and F-critical values provided for different test methods and factors (adhesive type, test criterion, and interaction) are presented in Table 6. A statistically significant result (i.e., F-statistic > F-critical) means that at least one group mean is different from the others. This implies that the treatment (or factor) had a significant effect on the variable being tested. A non-significant result (i.e., F-statistic ≤ F-critical) suggests that the differences between the group means could be due to random variation rather than the effect of the treatment.

Table 6: Analysis of Variance (ANOVA) for Adhesive type and Testing Criterion

Test Method	*Source of Variation*	*F-stat*	*F-crit*
ASTM-D5868	Adhesive type	4.78*	4.75
	Test Criterion	3.218	3.89
	Interaction	0.688	3.89
ASTM-D905	Adhesive type	0.002	4.75
	Test Criterion	0.061	3.89
	Interaction	0.031	3.89
EN 302-1	Adhesive type	5.33*	4.75
	Test Criterion	53.9*	3.89
	Interaction	0.211	3.89

*Significant at the P = 0.005 level

As shown in Table 6, for ASTM-D5868, there is a significant difference in adhesive type, but neither the test conditions nor their interaction with adhesive type have significant effects. For ASTM-D905, none of the factors (adhesive type, test conditions, or their interaction) show any significant effects on bonding strength. For EN 302-1, both adhesive type and test conditions have significant effects, meaning that both the type of adhesive and the environmental conditions (dry, soaked, heat) influence bonding strength. However, there is no interaction between these factors. These results suggest that EN 302-1 is a more sensitive test method that detects differences between adhesives and test conditions more clearly, whereas ASTM-D905 is less sensitive. ASTM-D5868 detects significant differences in adhesive type but not in test conditions.

3.2 Scanning electron microscopy (SEM) analysis

The results of scanning electron microscopy are presented as SEM images as shown in Figure 7 and 8. The results are analyzed base on surface features and topology, adhesive distribution and penetration, bond integrity and uniformity, and interfacial bonding. All these features are present due to the interaction between the adhesives and timber.

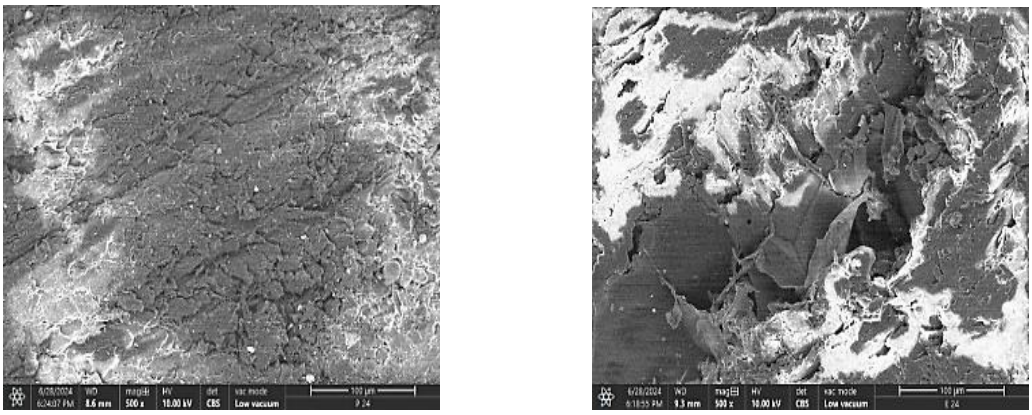

(a) (b)

Figure 7: SEM image at 100µm (500 magnification) for: (a) PUR adhesive (b) ER adhesive bond lines after 24 hrs pressing time.

For PUR adhesive after 24 hours of pressing, as can be seen in Figure 7a. The SEM image at 500x magnification reveals a rough and textured surface, characteristic of a well-penetrated adhesive bond. The lighter areas indicate good penetration of the PUR adhesive into the wood fibers, suggesting strong mechanical interlocking. The uniform distribution and lack of significant voids imply a strong and reliable bond. However as can be seen in Figure 7b, at 500x magnification, the ER adhesive shows a heterogeneous surface with varying thickness and roughness. The image indicates areas of thick adhesive layers, which might affect the uniformity of the bond. Despite the uneven surface, the ER adhesive shows good bonding with the wood fibers, but potential variability in bond strength. The heterogeneous bond observed in SEM analysis matches previous studies (Silva et al., 2015 and Liu et al., 2020), where the adhesive performance of ER can vary depending on penetration and bonding uniformity. This variability could account for the lower and more variable shear strength values you observed with ER adhesive.

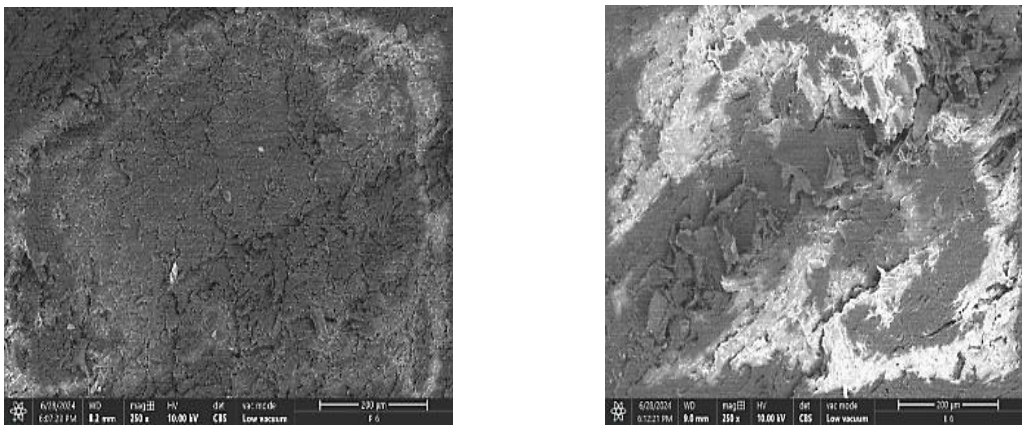

(a) (b)

Figure 8: SEM image at 200µm (250 magnification) for: (a) PUR adhesive (b) ER adhesive bond lines after 6 hrs pressing time.

Considering 6 hours of pressing time for PUR adhesive, the image at 250x magnification (Fig. 8a) shows a relatively uniform bond line, indicating effective adhesive distribution even with shorter pressing time. Consistent penetration into wood fibers with few voids or gaps, suggesting good bond strength. The rough texture indicates strong mechanical interlocking, essential for bond durability. On the other hand (Fig. 8b), the 250x magnification image shows a mix of rough and smooth areas, with ER adhesive well-penetrated into wood fibers. The bond line is more irregular compared to PUR, indicating differences in adhesive characteristics and interaction with wood. Good penetration, but the irregular surface may influence the overall bond strength. Generally, both PUR and ER adhesives show effective bonding with wood fibers, but the PUR adhesive demonstrates more uniform penetration and bond line formation, especially evident after 24 hours of pressing time. Moreover, extended pressing time (24 hours) enhances the bond quality for both adhesives, with more consistent and thorough adhesive penetration compared to a shorter pressing time (6 hours). The PUR adhesive's ability to form a uniform and consistent bond line makes it potentially more reliable for applications requiring high bond strength and durability. The ER adhesive, while effective, shows more variability in bond formation, which might impact its performance under varying conditions. For structural applications, the uniformity and consistency of the bond line are crucial. The findings suggest that PUR adhesive might offer better performance and reliability for wood bonding applications, particularly in load-bearing scenarios. This analysis highlights the importance of adhesive selection and pressing time in achieving optimal bond strength and durability in wood-adhesive composites.

4.0. Conclusion

Based on the investigations conducted in this study: Evaluation of the bonding performance of polyurethane (PUR) and epoxy resin (ER) adhesives with *Gmelina arborea* timber using different testing methods, the following conclusions can be drawn: The shear strength result ranged from 2.19 N/mm^2 (6 hrs) to 4.87 N/mm^2 (24 hrs) and 2.27 N/mm^2 (6hrs) to 5.16 N/mm^2 (hrs) for ER and PUR adhesive glue lines respectively. The results suggests that both PUR and ER adhesives exhibit increased shear strength with longer pressing durations across all testing standards (ASTM-D5868, ASTM-D905, and EN 302). For both adhesives, dry and wet conditions yield higher shear strength values compared to heat conditions. Specifically, PUR adhesive shows significantly higher shear strength under the EN 302-1 standard compared to ASTM standards, particularly in dry and wet conditions. ER adhesive performs well under all standards, with gradual increases in shear strength as pressing duration increases. Generally, the PUR adhesive used seemed to yield higher shear strength than the ER adhesive. Both adhesives (PUR and ER) demonstrate adequate bonding strength for structural applications, with prolonged pressing times enhancing bond integrity. The shear strength results seemed to be relatively dependent of the testing methods, adhesive type, testing criteria and duration of pressing. Test Method is a significant factor affecting shear strength in dry and soak conditions, indicating that the testing methodology impacts the performance assessment of the adhesive bond. Adhesive Type significantly influences shear strength only in the EN 302 test method, highlighting the importance of the adhesive used when considering specific test methods. Pressing Duration does not show a significant impact on shear strength across the test methods, suggesting that the time under pressure is less critical within the tested range. Test Criterion significantly affects shear strength in the EN 302 test method, indicating different criteria can yield varying performance results. Findings in this study suggest that while the choice of adhesive and the test

method are crucial factors in determining the shear strength of the wood adhesive bond, pressing duration within the tested range does not significantly influence the results. This highlights the need for careful selection of adhesives and test methods to ensure accurate evaluation of bonding performance in wood products. The results obtained from the study hold several significant implications and contributions to the field of wood adhesives and timber engineering. The results showing higher strength values using the EN 302-1 standard compared to the ASTM standards emphasize the importance of testing methodologies in evaluating adhesive performance. This highlights the need to adopt more sensitive and comprehensive testing standards, like EN 302-1, when developing new adhesive technologies and engineered wood products. Such insights can drive improvements in testing protocols within the timber industry, ensuring that adhesives are evaluated under realistic conditions. The SEM analysis revealing a well-penetrated and uniform bond with PUR adhesive and a more heterogeneous bond with ER adhesive provides crucial microstructural insights. These findings can guide adhesive manufacturers in optimizing the formulation of adhesives for better wood penetration, ensuring stronger and more reliable bonds. This contribution is particularly relevant in industries where bonding strength and durability are critical. The use of *Gmelina arborea* timber and the detailed evaluation of its bonding performance with PUR and ER adhesives adds valuable data to the relatively scarce research on local Nigerian timber species. This could promote the use of Gmelina in the production of engineered wood products such as CLT and glulam, contributing to the growth of the local timber industry and the sustainable utilization of Nigeria's forest resources. Generally, these results contribute to the broader understanding of adhesive-timber interactions and provide a foundation for further research into optimizing adhesives and promoting the use of local timber species in value-added engineered wood products.

5.0 Recommendation

The following areas of research are recommended for future study: Long-term durability under varying environmental conditions. For high-temperature applications, further optimization may be needed to improve performance under heat conditions**.** Exploring the potential of hybrid adhesive systems that combine the benefits of both PUR and ER adhesives to enhance bonding performance. Study the effect of various wood surface treatments (e.g., sanding, chemical treatment, plasma treatment) on the penetration and bonding performance of PUR and ER adhesives. Adhesive bond performance in Engineered Wood Products.

Acknowledgements

This research work was supported by Petroleum Technology Development Fund (PTDF), Nigeria.

References

Arum, C., Olofintuyi, I. O. and Ekundayo, O. O., 2021. Glulam beams: Performance of PVA and PUR Adhesives on Bending Strength of Locally Selected Nigerian Timber Species. *Nigerian Journal of Technology*, 40(3), 363-370.

ASTM-D198-14, 2014. Standard Test Methods of Static Testing of Lumber in Structural Sizes, *American Society for Testing and Materials (ASTM).* ASTM International, West Conshohocken, USA.

ASTM-D5868, 2014. Standard Test Method for Lap Shear Adhesion for Fiber Reinforced Plastic (FRP) Bonding. *American Society for Testing and Materials (ASTM) Annual Book of Standards*.

ASTM-D905–8, 2021. Standard Test Method for Strength Properties of Adhesive Bonds in Shear by Compression Loading, *American Society for Testing and Materials (ASTM) Annual Book of Standards*. ASTM International, West Conshohocken, USA.

BS EN 302-1, 2013. Adhesives for load-bearing timber structures—test methods—part 1: determination of longitudinal tensile shear strength. European Committee for Standardization, Brussels.

BS EN 338, 2016. Structural Timber – Strength Classes. *European Standard, European Committee for Standardization*.

BS EN 408, 2010. Timber structures - Structural timber and glued laminated timber - Determination of some physical and mechanical properties. *European Standard, European Committee for Standardization*.

Derikvand, M., and Fink, G., 2020. Bond strength of wood adhesives: The sensitivity of standard test methods to imperfections. *Proceedings of the 2020 Society of Wood Science and Technology International Convention, "Renewable Resources for a Sustainable and Healthy Future*", 507-514.

Frihart, C.R. and Hunt, C. G., 2010. Adhesives with wood materials: bond formation and performance. Wood handbook: wood as an engineering material: chapter 10. Centennial ed. General technical report FPL; GTR-190. Madison, WI: US Dept. of Agriculture, Forest Service, Forest Products Laboratory, 10.1-10.24

Iwuaha, S. E., Seim, W. and Onyekwelu, J. C., 2021. Mechanical properties of *Gmelina arborea* for engineering design. *Construction and building materials*, https://doi.org/10.1016/j.conbuilmat.2021.123123

Liu, C., Su, L., and Zhang, W., 2020. Performance of epoxy resin adhesive in timber joints exposed to cyclic loading and high temperature. *Construction and Building Materials*, *251*, 118967.

Luo, X., Li, L., Zhang, J., Han, Y., 2022. Polyurethane adhesives in wood bonding: mechanical performance and water resistance. *Polymers*, *14(2)*, 346.

Mo, F., Fang, X., Wang, J., & Meng, Y., 2021. A study on the durability of polyurethane adhesives for timber-concrete composite structures under different environmental conditions. *Construction and Building Materials*, *287*, 122991.

Purba, C. Y. C., Pot, G., Collet, R., Chaplain, M., 2022. Assessment of bonding durability of CLT and glulam made from oak and mixed popular-oak according to bonding pressure and glue type. *Construction and Building Materials*, *335*, 127345.

Shirmohammadi, M. and Leggate W., 2021. Review of existing methods for evaluating adhesive bonds in timber products. *IntechOpen: Engineered Wood Products for Construction*, http://dx.doi.org/10.5772/intechopen.99237

Sikora, K.S., McPolin, D.O and Harte, A.M., 2016. Shear strength and durability testing of adhesive bonds in Cross-laminated Timber. *The Journal of Adhesion*, *92*, 758-777, https://doi.org/10.1080/00218464.2015.1094391

Silva, M. A. G., Calil, C. Jr., and Molina, J. C., 2015. Performance of wood bonded joints with epoxy adhesives: A review. *Materials Research*, *18(4)*, 836-844.

Song, Y. J., Lee, I. H. and Hong, S. I., 2019. Evaluation of Delamination and Bending Performance of Composite CLT Reinforced with CFRP. *Wood and Fiber Science*, *51(4)*, 1-10. https://doi.org/10.22382/wfs-2019-xxx

Stoeckel, F., Konnerth, J., and Gindl-Altmutter, W., 2020. Mechanical properties of adhesives for bonding wood—a review. *International Journal of Adhesion and Adhesives*, *102*, 102611.

Xie, Y., Deng, Y., Wu, X., and Wang, H., 2021. Bonding performance of epoxy adhesives in structural wood joints under different moisture conditions. *Journal of Adhesion Science and Technology*, *35(8)*, 898-915.