UJEAS

UNIZIK JOURNAL OF ENGINEERING AND APPLIED SCIENCES

UNIZIK Journal of Engineering and Applied Sciences 2(2), September (2023), 279-284
Journal homepage: https://journals.unizik.edu.ng/index.php/ujeas
PRINT ISSN: 2992-4383 || ONLINE ISSN: 2992-4391

Evaluation of small signal stability of a two-machine transmission system with robust Power System Stabilizers and Static Var Compensator

Onuorah Joseph U, Anazia E. A, Ogboh V. C, Aniovono Ugochukwu E, Obute K. C.
Department of Electrical Engineering, Nnamdi Azikiwe University Awka, Nigeria

*Corresponding Author's E-mail: josephudemezueonuorah@gmail.com

Abstract

This work investigated the impact of robust Power System Stabilizers (RPSS) and Static Var Compensator (SVC) on the stability of a two-machine transmission system. To achieve this, a robust power system stabilizer and static var compensator were first developed and thereafter a two-machine transmission system was subsequently modeled in MATLAB/SIMULINK environment and analyzed. Then the response was observed when a single phase-to-ground transient fault was applied to the developed two-machine transmission system at transition time of 5.0s to 5.1s with inclusion of neither RPSS nor SVC. Thereafter RPSS and SVC were separately and simultaneously included in the system and their effects on the system, small signal stability after the fault has been cleared was monitored. This same process was repeated when a three-phase fault was applied to the same two-machine transmission system. The results show that the system evaluates successfully the small signal stability of a bi-machine transmission system only with the application of RPSS when a single-phase fault has occurred and the application of SVC (in addition to RPSS) when a three-phase fault has occurred.

Keywords: stabilizers, compensator, stability, transmission, robust, two-machine, fault.

1. Introduction

Sustained power system oscillation has become a serious problem for power system operation and control nowadays. Oscillations cause safety problems in electric power equipment and limit the transmission capacity of long-distance power transmission. Even, in the most severe cases, growing power oscillations may lead to the collapse and blackout of the whole interconnected system if no appropriate measures are taken on time. Power system stabilizers (RPSSs), as one kind of the most economical and practical devices, have been widely equipped on synchronous generators to provide damping torque and stabilize power system oscillations, but the damping performance of the conventional RPSS in suppressing power system oscillations is limited, especially the inter-area oscillation modes, since the local measurement feedback signals of RPSSs are of low inter-area mode observability (Vittal & Keane, 2013).

To damp out inter-area low frequency oscillation modes more efficiently, new damping measures need to be developed. Flexible AC transmission system (FACTS) devices, commonly located in power systems, are primarily used for scheduling power flow and/or providing voltage support (Waldner & Erlich, 2014). Besides that, with the advance of fast acting FACTS controllers, it is possible to improve system dynamic stability and damp system low frequency oscillations. The concept of power oscillation damper (POD) is widely accepted by the engineers to restrain inter-area oscillations in power grids. Considerable research focus has been given on designing various

FACTS PODs and their coordination with RPSSs to significantly improve the small signal stability of power systems (He et al, 2016).
Among all the works reviewed, it is imperative that SVC specifically as a FACTS device be combined with MB-RPSS to damped the oscillation in a two-machine transmission system. There is need for the application of RPSS to a bi-machine transmission system only to observe the effect on transient stability when a single-phase fault has occurred and also the application of SVC (in addition to RPSS) to observe the effect on transient stability when a three-phase fault has occurred.

2.0 Material and methods

Materials used for the study

- 330kV, 300km transmission line
- Two hydraulic generation plants
- Two transformers
- Robust power system stabilizers
- Static var compensator
- Fault breaker
- Meters
- Resistive load

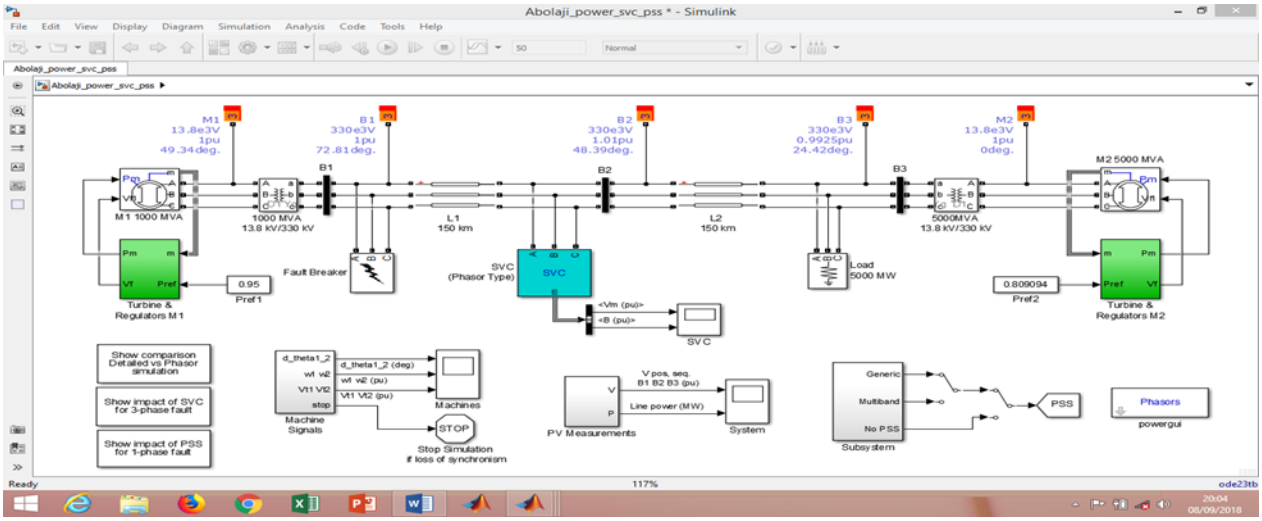

Figure 1: Matlab snapshot of small signal stability of a two-machine transmission system with Power System Stabilizers (RPSS) and Static Var Compensator (SVC)

1000MW hydraulic generation plant (machine M1) is connected to a load center through a long 330kV, 300kM transmission line. The load center is modeled by a 5000MW resistive load. The load is fed by the remote 1000MW plant and local generation of 5000MW (machine M2). The system has been initialized so that it carries 950MW which is close to its surge impedance loading (SIL = 977 MW). In order to maintain system stability after faults, the transmission line is shunt compensated at its center by a 200-Mvar Static Var Compensator (SVC). The SVC does not have a Power Oscillation Damping (POD) unit. The two machines are equipped with a Hydraulic Turbine and Governor (HTG), Excitation system and Power System Stabilizer (RPSS). These blocks are located in the two 'Turbine and Regulator' subsystems. Two types of stabilizers can be selected:

a) A generic model using the acceleration power (p_a = difference between mechanical power p_m and output electrical power p_{eo}) and
b) A Multi-band stabilizer using the speed deviation (dw).

The stabilizer type can be selected by specifying a value ($0 =$ No RPSS, $1 = p_a$ RPSS or $2 =$ dw MB RPSS) in the RPSS constant block.
In Figure 1, faults ware applied on the 330kV transmission system and the impact of RPSS and SVC on the system stability was observed. Figure 3.9 shows the Simulink model of the machine turbine and the regulator of M1.

3.0 Results and Discussions

It is worthy of note that from the simulation studies the system is naturally unstable without RPSS, even for small disturbances. For example, when the fault was removed (by deselecting phase A in the Fault Breaker) and a Pref step of 0.05 pu was applied on the machine 1, instability was slowly built up after a few seconds. This is vividly illustrated in Figure 2.

The RPSS (Generic type) and the SVC defined to work in the 'Voltage regulation' mode were then put in service; and the same 3-phase-to-ground fault applied. In the 'voltage regulation' mode, the SVC supported the voltage by injecting reactive power on the line when the voltage was lower than the reference voltage (1.009pu). The chosen SVC reference voltage corresponded to the bus voltage with the SVC out of service. In steady state the SVC would therefore be 'floating' and waiting for voltage compensation when voltage departs from its reference set point. On simulation, it was observed that the system was stable with a 3-phase fault.

3.1 Impact of RPSS and SVC on Two Machine System with Single-Phase Fault

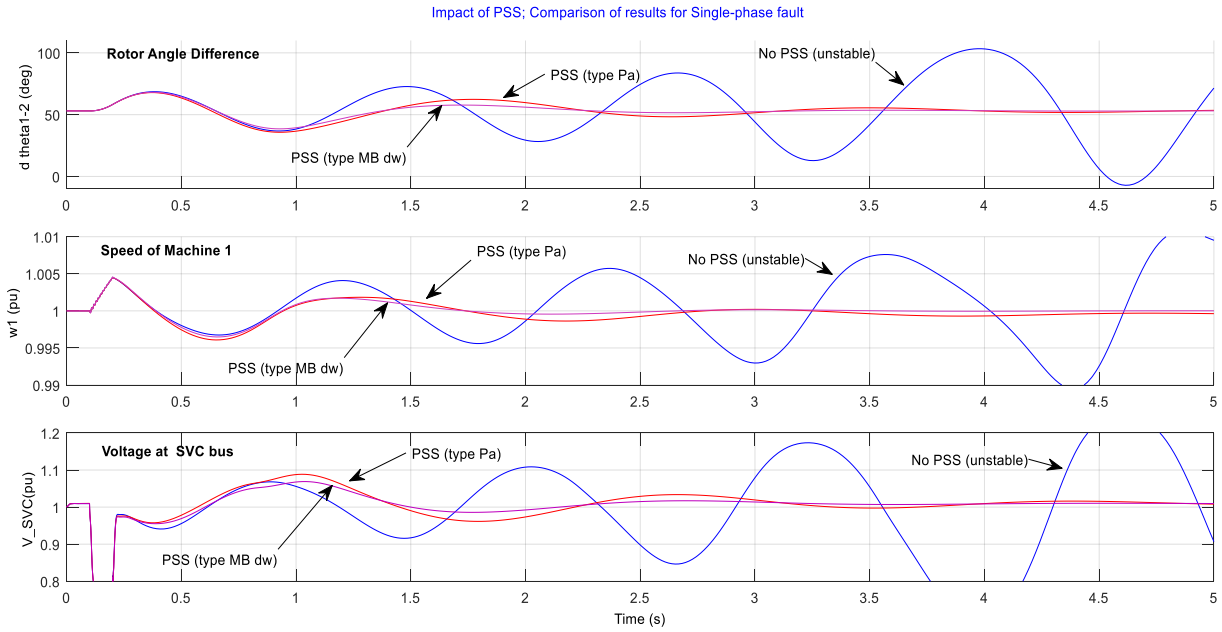

Figure 2: Impact of RPSS; Comparison of results for Single-phase fault

Figure 2 shows the comparison of the simulation results obtained when the two types of RPSS (Generic and Multiband RPSS) were put into services. It can be seen from the Figure that performance of the Multiband RPSS was better than that of Generic RPSS as it offered less oscillation. As indicated by the blue curve the system became unstable without either RPSSs.

3.2 Three-Phase Fault: Impact of SVC - Two RPSSs in Service

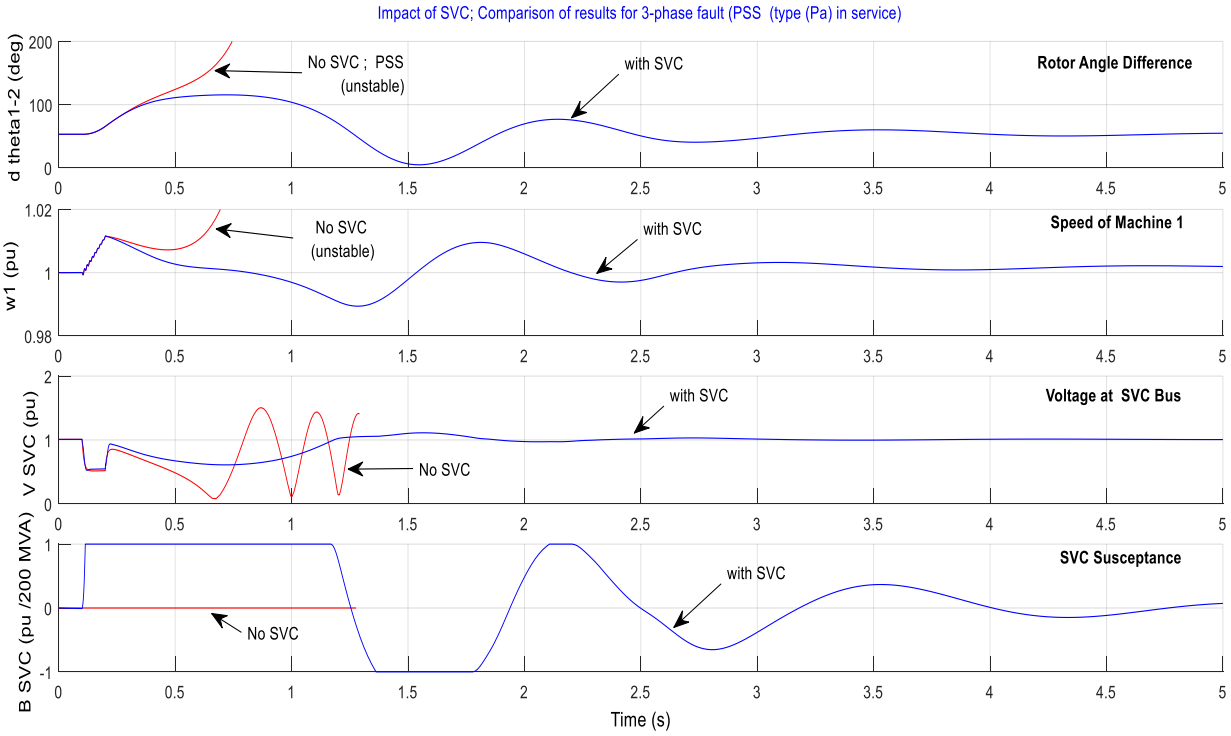

Figure 3: Impact of SVC; Comparison of results for 3-phase fault (RPSS (type Pa) in service)

Figure 3 shows the comparison of the simulation results obtained when the RPSS (Generic RPSS) were put into services alone and secondly when both the RPSS and SVC were put into service. It can be seen from the Figure that performance of the system resulted in instability when only the RPSS was in service but the system regained its stability after the fault was cleared when both the RPSS and the SVC were in service oscillation. As indicated by the blue curve represents the response of the system with both RPSS and SVC while the red curve represents the response of the system with RPSS and without SVC. The first trace of Figure 4.26 shows the rotor angle difference 'd_theta1_2' between the two machines. The second and the third traces show the machine speed and the voltage at SVC bus respectively. The fourth trace shows the susceptance at SVC bus.

4.0. Conclusion

A study of Power System Stabilizer (RPSS) and Static Var Compensator (SVC)-based controllers has been carried out. The design of these controllers was discussed in brief and their effectiveness in enhancing power system stability assessed. In the RPSS design, Particle Swarm Optimization (PSO) was employed where the search for the optimal controller parameter settings that optimize the objective function was done. To guarantee the robustness of the proposed controller, the design process was carried out considering a wide range of operating conditions: Heavy, normal and light loading. The SVC design process employed gate turn-off thyristors and dc voltage-control. Of the studied controllers, the SVC is the most versatile FACTS controller finding wide application in the operation and control of power systems, such as scheduling power flow; decreasing unsymmetrical components; reducing net loss; providing voltage support; limiting short-circuit currents; mitigating sub-synchronous resonance (SSR); damping power oscillations; and enhancing transient stability. Meanwhile, the SVC enhances system stability by controlling the amount of reactive power injected into or absorbed from the power system. On the other hand, the RPSS has for a long time found application in the exciters of synchronous machines as an effective means of damping the generator unit's characteristic electromechanical oscillations by modulating the generator excitation. A simulation was carried out to demonstrate the effectiveness of the RPSS and SVC in damping power oscillations. Results obtained clearly highlighted the reasons behind the fast spreading use of Power Oscillation Damping controllers in power systems worldwide: In Nigeria, GENCOS employs RPSSs in its excitation systems while Discos is due to roll

out SVCs in its transmission and distribution systems. Thus, RPSSs and FACTS are fast becoming a necessity in power system stability enhancement rather than an option to be considered.

4.1 Contribution to Knowledge

- ❖ This Thesis shows that SVC specifically as a FACT device was combined with MB-RPSS to damp the oscillation in two machine transmission system.
- ❖ It shows that RPSS was applied to a bi-machine transmission system only to observe the effect on small signal stability when a single phase fault has been occurred.
- ❖ It also shows that SVC (in addition to RPSS) was applied to observe the effect on small signal stability when a three phase fault has been occurred.

5.0 Recommendation

A study has been done of the RPSS and FACTS controllers (SVC), in fact many more FACTS are yet to be studied and the full extent of their capabilities assessed. An interesting angle to this fast growth in the FACTS area is that the IEEE is at pains to keep up with standardization of new terms and definitions that sprout with the advent of such new (and maybe system-specific) FACTS controllers. Thus, the field of FACTS technology is especially dynamic, presenting sample study and research ground. The study of the RPSS with a view to assessing possible improvement areas is also of importance. Equally important is a deeper understanding and comprehension of the technologies discussed in this work. This may be done in the light of the already on-going use of RPSSs by Genco, Nigeria; and the soon-to-be implemented SVC technology by the Discos, Nigeria. An important aspect to this particular study would be the cost implications these technologies have or would have to both the generation and transmission/distribution companies, and to the consumer of electric power whose eventual satisfaction is paramount. With the controller hardware, is software that presents the management aspect of this technology. A study of the various software employed and their role in the monitoring of electric power systems is of great important.

References

Ali A., 2013. Development of system with transitory steadiness of a bi-machine transmission system with power system stabilizers and static Var compensator. International Journal of Engineering Research and Applications, **3**(3), 1121-1125.

Alok K., Surya Bhushan D., 2013. Enhancement of transient stability in transmission line using SVC facts controller" International Journal of Recent Technology and Engineering, **2**(2).

Alrifai, M.; Zribi, M.; Rayan, M., 2016. Feedback Linearization controller for a wind energy power system. *Energies*, *9*, 771.

Anil kumar N., Ramesh K., 2016. Transient stability improvement using SVC and RPSS. International Research Journal of Engineering and Technology, **03**(7), 1305-1311.

Bakhshi M., Holakooie M.H., Rabiee A., 2017. Fuzzy based damping controller for TCSC using local measurements to enhance transient stability of power systems. Int. J. of Elec. Power and Energy Sys. Vol. 85, pp. 12–21.

Bian X. Y., Geng Y., Lo K. L., Fu Y., Zhou Q. B. 2016. Coordination of RPSSs and SVC damping controller to improve probabilistic small-signal stability of power system with wind farm integration. IEEE Trans. Power Syst., **31**(3), 2371-2382.

Cardenas, R.; Pena, R.; Alepuz, S.; Asher, G., 2013. Overview of Control Systems for the Operation of DFIGs in Wind Energy Applications. *IEEE Trans. Ind. Electr.*, *60*, 2776–2798.

He, P.; Wen, F.; Ledwich, G.; Xue, Y., 2016. An investigation on inter area mode oscillations of interconnected power systems with integrated wind farms. *Int. J. Electr. Power Energy Syst.*, *78*, 148–157.

Hossain Sadi M. A., Hasan Ali M., 2014. Combined operation of SVC and optimal reclosing of circuit breakers for power system transient stability enhancement. Electric Power Systems Research, 106, 241-248.

Hussein, T. R., 2014. Using Power System Stabilizers (RPSS) and Shunt Static Var Compensator (SVC) For Damping Oscillations in Electrical Power System. Journal of faculty MAAMOUN.

Vittal, E.; Keane, A., (2013). Identification of critical wind farm locations for improved stability and system planning. *IEEE Trans. Power Syst.*, *28*, 2950–2958.

Waldner, M.; Erlich, I., 2014. Variable speed wind turbines based on electromechanical differential systems. *IEEE Trans. Energy Convers.*,*29*, 101–109.