JEAS

Journal of Engineering and Applied Sciences 7 (2011) 39-44

JOURNAL OF ENGINEERING
AND
APPLIED SCIENCES

Dynamic effects of the ratio of applied/natural frequency on the amplitudes of joint displacements of MDOF frames

G. C. Ezeokpube, [1]V. M. Nwokike

Department of Civil Engineering, Michael Okpara University of Agriculture, Umudike, Umuahia
[1]Department of Civil Engineering, Anambra State University, Uli

Abstract

This paper examined the effects of the various ratios of applied/natural frequency on the amplitude of joint displacements of any given undamped MDOF frame for a given forcing frequency. Three different models were used to carry out dynamic analyses on a chosen MDOF frame subjected to constant dynamic load with forcing frequencies varying from zero to outside the range of the natural frequencies. Amplitudes of joint displacements were first determined from the equations of motion for forced vibration and secondly by applying the frequency ratios to the conventional expression of dynamic magnification factor for SDOF systems. The results show that, for a given forcing frequency, the displacements obtained by applying the Maximum Frequency Ratio to the conventional expression of the dynamic magnification factor agree with that obtained by direct analysis and that significant displacement occur when this ratio lies in the range of 0.58 to 1.29. The other frequency ratios, so long as they are not unity, have little or no effects on the displacements. The ideas developed here could be used in practice as a control for deflection results obtained from rigorous dynamic analysis of MDOF frames.

Keywords: MDOF; many degrees of freedom; SDOF, single degree of freedom

1. Introduction

Dynamic degrees of freedom of a structure may be defined as the number of displacement components which must be considered in order to represent the effects of all significant inertia forces of the structure (Clough and Penzien, 1975). A structure is said to have many degrees of freedom, MDOF, when two or more displacement components are required to define its configuration (Coates, et al., 1980). MDOF model is said to be fully defined if the magnitudes of the lumped masses and their individual locations are known (Osadebe, 1999). In the dynamic analysis of structures using the lumped mass procedure structural system with infinite degrees of freedom is idealized by transforming it to MDOF system (Anya, 1995; Osadebe, 1999).

The type of structure considered here are continuous building frames subjected to horizontal disturbances e.g. dynamic loading due to blast or wind gust. Such structures are considered, without appreciable error, to be lumped-mass systems, with masses concentrated at floor levels (Biggs, 1964; Ezeokpube, 2002; Masur, 1962). Only horizontal motions are considered, and these are assumed to be independent of vertical motions. This assumption is permissible because vertical motion due to changes in column length or flexure of girders has relatively small amplitude and hence, little effect on the horizontal response (Biggs, 1964).

In undamped SDOF (Single Degree of Freedom) system, the relationship between the amplitude of joint displacements and the ratio of applied/natural frequency is precisely known (Smith, 1988). However, for any given MDOF frame, with n natural frequencies and subjected to a forcing frequency, there are n frequency ratios corresponding to each of the natural frequencies. How each of these ratios affects the amplitude of joint displacement of an MDOF frame is examined in this paper using three different models.

Stiffness formulation was used in each of the models to carry out dynamic analysis on a chosen MDOF frame subjected to constant dynamic load with twelve forcing frequencies varying from zero to outside the range of the natural frequencies. Natural frequencies were determined by solving the equations of motion for free undamped vibration as eigenvalue problem (Boswell and D'Mello, 1993). Frequency ratios are then calculated. Amplitudes of joint displacements were determined first from the equations of motion for forced

vibration and secondly by applying the frequency ratios to the conventional expression of Dynamic Magnification Factor for SDOF frames. The displacements obtained by both methods were examined.

Previous works (Coates et al, 1980; Smith, 1988) showed that in undamped SDOF systems displacements tend to zero if the ratio of applied/natural frequency is large and that displacements tend to infinity if the ratio of applied/natural frequency is near unity. Also, Nelson and Bhatt (1990) showed that if any of the frequency ratios in undamped MDOF systems tends to unity the displacements tend to infinity. The criterion for displacements to tend to infinity is that the determinant of the dynamic structural stiffness matrix tends to zero.

2. The MDOF models

In each of the three MDOF models, the structure is idealized into a conjugate system with imaginary horizontal translational restrictions. The dynamic structure stiffness coefficient k_{ij} is obtained by imposing unity translations, in turn, at each floor of the conjugate frame and determining the resulting reactions at the points of restrictions. The major differences in the models lie in the type of element stiffness matrix used and the assumptions made in obtaining the dynamic structure stiffness coefficients k_{ij}.

2.1. Flexible-frame model

Displacement occurs as a result of rotations and translations of joints as well as flexure of members. Conventional element stiffness coefficients are used for beams and for columns. The resulting dynamic stiffness coefficients k_{ij} take into consideration, the translation of floors as well as the rotation of joints.

2.2. Frame-with-stiffed-joint model

The joints are assumed to be infinitely rigid or stiffed. Rotation of stiffened joints as a rigid body is due to bending (flexure) of the flexible portions of adjoining beams and columns. Modified element stiffness coefficients are used for beams and columns. The resulting dynamic structure stiffness coefficients k_{ij} take into consideration the translation of floors as well as the rotation of the joints.

2.3. Shear-frame model

Rotation of the joints is assumed not to occur and the structure is assumed to sway only in its plane. Conventional element stiffness coefficients are used for the columns only since the beams are assumed to be infinitely stiff relative to the columns. Consequently, the dynamic stiffness coefficients take into consideration the translation floors only.

3. Amplitude of joint displacements using the maximum frequency ratio

In the absence of damping, the relationship between the amplitude of displacement and the dynamic magnification factor for SDOF systems in general is given by:

$$x/\Delta = 1/(1-\beta^2)$$
$$\text{or } x = \Delta/(1-\beta^2) \quad (1)$$

where, x = the amplitude of the displacement
Δ = the static displacement
β = frequency ratio (i.e. θ/ω)
θ = forcing frequency
ω = natural frequency
$x/\Delta = 1/(1-\beta^2)$=dynamic magnification factor

In the case of MDOF frame, there are several frequency ratios corresponding to each of the natural frequencies for a given value of the forcing frequency θ, Thus,

$$\beta_k = \theta/\omega_k \text{ (for k =1, 2, …, n)} \quad (2)$$

It is usual to let the minimum natural frequency (or fundamental frequency) be represented by ω_1, so β_1 becomes the maximum frequency ratio. Thus,

$$\beta_1 = \beta_{maz} = \theta/\omega_1 \quad (3)$$

The other frequency ratios, in ascending order of magnitudes, are

$$\beta_2 = \theta/\omega_2, \quad \beta_3 = \theta/\omega_3, \ldots, \quad \beta_n = \theta/\omega_n \quad (4)$$

Each of these frequency ratios are applied in turn to equation (1) in order to study their effects in the magnification of static displacements of MDOF frames to obtained their dynamic equivalents using each of the three models.

4. Application

An MDOF framed building structure (fig. 1) with three degrees of freedom is subjected to dynamic load as shown. The masses M_1, M_2 and M_3 are assumed to be lumped at the first, second and third floors respectively. At constant load forcing frequencies (θ_1, θ_2, …, θ_{12})varying from zero (i.e. θ_1=0) to outside the range of the natural frequencies wee applied in turn to the given frame. Dynamic analyses of the structure were done as follows:

1. Carry out free and forced vibrations analyses to determine the natural frequencies and amplitudes of joint displacements respectively using the following models:

a. Model 1 = Flexible Frame Model
b. Model 2 = Frame-With-stiffened-Joint Model
c. Model 3 = Shear Frame Model

II. Determine the frequency ratios of β_k (for k = 1, 2, 3).

III. Determine the amplitudes of joint displacements corresponding to each frequency ratio by using equation (1).

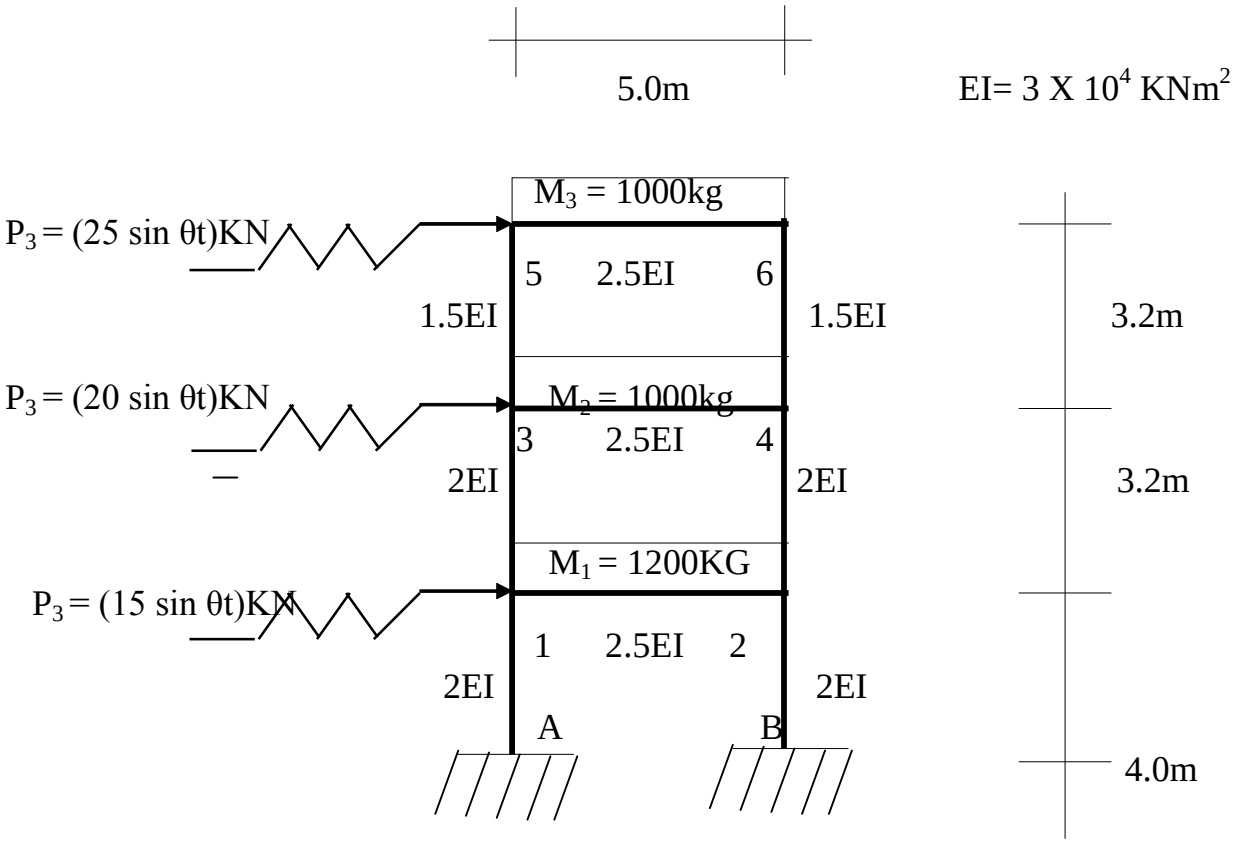

Fig. 1 MDOF frame.

5. Results of analysis and discussion

Results of the various analyses are presented below in tables 1 to 4. Amplitudes of joint displacements presented here are those of third floor only.

Table 1
Natural frequencies

	Natural frequencies (10^{-1} rad/sec)		
Model	ω_1	ω_2	ω_3
MODEL 1 (Flexible Frame)	15.8881	15.8881	30.4339
MODEL 2 (Frame with Stiffened Joint)	8.2550	25.8924	49.9870
MODEL 3 (Shear Frame)	7.5119	20.8660	34.1075

Table 2
Results of analysis using model 1

S/N	Forcing freq	Frequency ratio			Results of displacement		
	θ_n (rad/sec x 10-1)	β_1	β_2	β_3	Displ. using max freq. ratio (mm)	Displ. using direct analysis (mm)	Percentage difference
1	0	0	0	0	10.0	10.0	0
2	2.0265	0.40	0.13	0.07	11.9	11.9	0
3	4.0530	0.80	0.26	0.13	27.9	27.9	0
4	$\overline{\omega_1}$	1	0.32	0.17	∞	∞	0
5	7.2227	1.43	0.45	0.24	9.6	9.7	1
6	13.7178	2.71	0.86	0.45	1.6	1.6	0
7	$\overline{\omega_2}$	3.14	1	0.52	1.1	∞	∞
8	21.7026	4.29	1.37	0.71	0.6	0.6	0
9	27.5223	5.44	1.73	0.90	0.3	0.3	0
10	$\overline{\omega_3}$	6.02	1.92	1	0.3	∞	∞
11	33.3420	6.59	2.10	1.10	0.2	0.2	0
12	39.1617	7.74	2.47	1.29	0.2	0.2	0

Table 3
Results of analysis using model 2

S/N	Forcing freq	Frequency ratio			Results of displacement		
	θ_n (rad/sec x 10^{-1})	β_1	β_2	β_3	Displ. using max freq. ratio (mm)	Displ. using direct analysis (mm)	Percentage difference
1	0	0	0	0	3.8	3.8	0
2	3.2909	0.40	0.13	0.07	4.5	4.5	0
3	6.5991	0.80	0.25	0.13	19.4	10.4	0
4	$\overline{\omega_1}$	1	0.32	0.17	∞	∞	0
5	11.7779	1.43	0.45	0.24	3.6	3.6	0
6	18.8794	2.29	0.73	0.38	0.9	0.9	0
7	$\overline{\omega_2}$	3.13	1	0.52	0.4	∞	∞
8	30.6573	3.71	1.18	0.16	0.3	0.3	0
9	40.3568	4.88	1.56	0.81	0.2	0.2	0
10	$\overline{\omega_3}$	6.05	1.93	1	0.1	∞	∞
11	54.7675	6.63	2.12	1.10	0.1	0.1	0
12	59.5479	7.21	2.30	1.19	0.1	0.1	0

Table 4
Results of analysis using model 3

S/N	Forcing freq	Frequency ratio			Results of displacement		
	θn (rad/sec x 10-1)	`β_1	β_2	β_3	Displ. using max freq. ratio (mm)	Displ. using direct analysis (mm)	Percentage difference
1	0	0	0	0	4.4	4.4	0
2	2.5115	0.3	0.12	0.07	5.0	5.0	0
3	5.0056	0.67	0.24	0.15	8.0	8.1	1
4	$\bar{\omega}_1$	1	0.36	0.22	∞	∞	0
5	11.9685	1.59	0.57	0.35	2.9	2.9	0
6	16.4198	2.18	0.79	0.48	1.2	1.2	0
7	$\bar{\omega}_2$	2.78	1	0.61	0.7	∞	∞
8	25.2879	3.36	1.21	0.74	0.4	0.4	0
9	29.7047	3.95	1.42	0.87	0.3	0.3	0
10	$\bar{\omega}_3$	4.54	1.63	1	0.2	∞	∞
11	38.5208	5.12	1.85	1.13	0.2	0.2	0
12	42.9375	5.71	2.06	1.26	0.1	0.1	0

Table 1 shows the results of natural frequencies for all models while table 2, 3 and 4 show the results of frequency ratios and displacement for Models 1, 2 and 3 respectively. Dynamic response information obtained from the three models share similar characteristics.

In tables 2, 3 and 4 only displacements obtained by using the maximum frequency ratio (β_1 or β_{max}) and that of direct analysis were presented and compared using percentage difference. The results of the other displacements involving the lower frequency ratios were not presented since they did not compare reasonably with that of the direct analysis.

From table 2, 3 and 4, it is obvious that for any frequency ratio of unity, the displacements obtained by direct analysis tend to infinity and as the frequency ratios tend to infinity, displacements tend to zero. Dynamic displacement obtained when the maximum frequency ratio is zero corresponds to static displacement. The percentage difference between the displacements compared was zero in majority of the cases except where the lower frequency ratios are unity. Therefore displacements obtained by using the maximum frequency ratio agree with that of direct analysis except where the lower frequency ratios are unity. It can be inferred that joint displacements of MDOF frames depend, to a large extend, on the maximum frequency ratio and that the effects of the lower frequency ratios ($\beta_2, \beta_3, \ldots, \beta_n$) are negligible i.e.

$$X_i = \Delta_i/(1-\beta_1^2) = \Delta_i/(1-\beta_{max}^2) \quad (5)$$

where, the subscript i refers to the floor level under consideration.
Further investigation revealed that when the maximum frequency ratio lies in the range 0.58 to 1.29 significant displacement (at least 150% of the static equivalent) occurs.

6. Conclusion

In conclusion, when undamped MDOF frames are subjected to constant dynamic load, the amplitude of joint displacements depends, to a large extent, on the maximum frequency ratio. The lower frequency ratios have little or no effect in this aspect. In practice, the concept of the maximum frequency ratio can therefore be used very easily to crosscheck dynamic displacement results obtained from rigorous analysis particularly when this ratio is less than unity. Furthermore, great attention should be given to the dynamic analysis of MDOF frames when the maximum frequency ratio lies in the range 0.58 to 1.29.

References

Anya, C. U., 1995. Dynamic Analysis of Tall Buildings. M. Eng. (Struct. Engr.) Project, University of Nigeria, Nsukka, p.2.

Biggs, J. M., 1964. Structural Dynamics. McGraw Hill Inc., USA, p. 125.

Boswell, L. F., D'Mello, C., 1993. Dynamics of Structural Systems. Typesetters, Hong Kong, p. 90.

Clough, R., Penzien, J., 1975. Dynamics of Structures. McGraw-Hill, p.5.

Coates, R. C., Coutie, M. G., Kong, F. K., 1980. Structural Analysis, 2nd Ed. ELBS, p. 344.

Ezeokpube, G. C., 2002. Dynamic Response of Frames with Stiffened Joints. M. Eng. (Struct. Engr.) Project, University of Nigeria, Nsukka, p. 7.

Masur, E. F., 1962. Discussion on Effect of Joint Rotation on Dynamics of Structures. ASCE, Mechanics Division, vol. 88, pp. 83 – 85.

Nelson, H. M., Bhatt, P., 1990. Marshall Nelson's Structures, 3rd Ed. Longman Group Ltd., UK, p. 485.

Osadebe, N. N., 1999. An improved MDOF model stimulating some with distributed mass. Journal of the University of Science and Technology, Kumasi, 19(1-3), 56.

Smith, J. W., 1988. Vibration of Structures. Chapman and Hall, USA, pp. 17 – 20.