JEAS

JOURNAL OF ENGINEERING AND APPLIED SCIENCES

Journal of Engineering and Applied Sciences 12 (2018), 1-10

DYNAMIC ANALYSIS OF A BAR WITH END RESTRAINT UNDER LONGITUDINAL VIBRATION

Okonkwo V. O.[1*], Aginam C. H.[2] and Nwaiwu C. M. O.[3]
[123]Department of Civil Engineering, Nnamdi Azikiwe University, Awka
[*]Corresponding Author's E-mail: odinakao@gmail.com

Abstract

Lagrange equations allow structural systems to be modeled as an assemblage of discrete masses connected by mass-less elements. The solution presented by the Lagrange equations is exact for such systems, but when a continuous system is modeled as having discrete masses connected by mass-less elements the results become approximate. Mass discretization as seen in the use of Lagrange equations for the analysis of continuous systems introduces an error in the inertia matrix. This error can be corrected by making a corresponding modification in the systems' stiffness matrix. To achieve this, the force equilibrium equations of discrete elements of the continuous system were formulated for such systems under free vibration (using the Hamilton's principle and the principle of virtual work) and the inherent forces causing vibration obtained. This was then equated to the corresponding equation of motion of the lumped massed (with discrete masses) system and the stiffness matrix of the system necessary for such equality obtained as a function of a set of modification factors. This was used to generate a table of stiffness modification factors for segments of the fixed-fixed beam under longitudinal vibration. By employing the Lagrange equations to lumped massed beams using these modification factors, we were able to predict accurately the fundamental frequency of the beam irrespective of the position or number of lumped masses introduced.

Keywords: Lagrange's equations, discrete masses, lumped mass, stiffness, natural frequency

1. Introduction

All bodies possessing mass and elasticity are capable of vibration thus all structures experience vibration to some degree (Thomson, 1996; Rajasekaran, 2009). A system under free vibration will vibrate at one or more of its natural frequencies. The natural frequencies of a system depend on the distribution of its mass and stiffness and hence are a property of the dynamical system (Ezeokpube, 2002; Blake, 2010). The number of independent coordinates required to describe the motion of a system is known as the degrees of freedom of the system. A continuous structure will have an infinite number of degrees of freedom and hence an infinite number of coordinates to analyze. However certain idealizations are made and a continuous system may be treated as one having a finite number of degrees of freedom (Blake, 2010). For systems with few degrees of freedom, it is possible to formulate the equations of motion by an application of the Newton's laws of motion (Benaroya and Nagurka, 2010; Chandrasekaran, 2015). The method however becomes complicated for systems with a high degree of freedom and the energy methods provide a convenient alternative. One of the notable products of the energy method is the Lagrange's equations. The Lagrange's equation enables the analysis of structural elements as discrete masses connected together by mass-less elements (Ahmed and Campbell, 2013). With a proper selection of representative masses the results can be very close to the exact response. When the discretization is increased by the use of more number of lump masses, the accuracy of the response improves.

In order to obtain the exact response of structural systems it is necessary to analyse them as elements with continuously distributed masses. A continuous structure has infinite degrees of freedom and normal modes but generally the first few modes are of most importance.

The advent of fast digital computers has made the analysis of large simultaneous equations easy (Saad and Henk, 2000). This can be put to use in the Finite Element Method. Just like in the Rayleigh-Ritz method, there is need to select a shape function. The

accuracy of finite element method can be improved upon by the careful selection of better shape functions (p-version) and also by the introduction of more joints/nodes and hence more elements (h-version) (Houmat, 2009; Beaurepaire and Schueller, 2011; Tornabene et al 2015). The latter has the implication of increasing the size of the resulting equations and hence the computational cost.

It is common practice to model a continuous system as being made of discrete masses connected by mass-less elements (Stephenson and Agapiou, 2005; Naess and Moan, 2012). This is largely because such discretization offers an easier dynamic analysis like the finite element and the Rayleigh-ritz method. It reduces the degree of freedom of the system from infinity to a finite value (Matthies et al., 1997; Ahan and Arisoy, 2014). It also offers a simpler and realistic visual appeal that aids the understanding of the rudiments of structural dynamics hence its use in most introductory topics in structural dynamics (Kot et al., 2015). But such a simplification of the real system comes at a cost. The result obtained from such a dynamic analysis becomes less accurate (Morgan and Qiao, 2008; Baudet et al, 2007). This is largely due to the mass distortion occasioned by the use of lumped masses to represent continuous masses. This shortfall in accuracy of obtained results has greatly limited the use of lumped mass to represent continuous mass in researches in structural dynamics. This work hoped to redress it by modifying the system's stiffness matrix.

1.1 Mathematical theory

Lagrange formulated a scalar equation in terms of generalized coordinates and is presented as

$$\frac{\partial}{\partial t}\left(\frac{\partial T}{\partial \dot{q}_i}\right) - \frac{\partial T}{\partial q_i} + \frac{\partial U}{\partial q_i} = Q_i \quad (1)$$

$$i = 1,2,\ldots n$$

Where q_1, q_2, …, q_n are a set of independent generalized displacements, T is the kinetic energy of the structure and U is the strain energy of the structure and Q_i is the non-conservative or the non-potential force on the system. The Lagrange's equations can be used to develop the matrix equation for the analysis of a free undamped n-degree of freedom discrete mass structure.

$$[m]\{\ddot{q}\} + [k]\{q\} = 0 \quad (2)$$

By pre-multiplying the equation with the structure's flexibility matrix [f] and obtaining the solution for a harmonic vibration will lead to an eigenvalue problem

$$([D] - \lambda[I])\{\phi\} = 0 \quad (3)$$

Where [D] is the dynamical matrix, [I] is an identity matrix and $\lambda = {}^{1}/_{w^2}$ (4)

Equation (3) represents a system of n-homogenous, linear algebraic equation in the amplitudes $\{\phi\}$ and can be solved to get the frequencies w_1, w_2, …, w_n for an n-degree of freedom system. For each distinct frequency w_j, there will be a set of amplitudes $\{\phi\}_j$ .The eigenvectors or relative amplitudes $\{\phi\}_j$ obtained from a free vibration satisfy certain orthogonality conditions (Tauchert, 1974).

While Lagrange's equations provide a way of analyzing a multi but finite degree of freedom system, a similar approach for continuous structures is an energy theorem known as the Hamilton's principle. The principle states that the motion of an elastic structure during the time interval $t_1 < t < t_2$ is such that the time integral of the total dynamic potential $U - T + V_E$ is an extremum (Thomson and Dahleh, 1998).

$$\delta \int_{t_1}^{t_2} (U - T + V_E)dt = 0 \quad (5)$$

where U represents the strain energy of the system, T the kinetic energy and V_E the work done by the external forces. The partial differential equation and boundary conditions governing the free longitudinal vibration of a bar are

$$c^2 u_1'' = \ddot{u}_1 \quad (6)$$

where $c^2 = \frac{EA}{\mu}$ (7)

$$N_o = \left[EAu_1'\right]_{x_1=0} \text{ or } \delta u_1(0,t) = 0 \quad (8)$$

$$N_L = \left[EAu_1'\right]_{x_1=0} \text{ or } \delta u_1(L,t) = 0 \quad (9)$$

Where A(x_1) is the cross sectional area of the bar, μ(x_1) is the mass per unit length of the bar and E is the modulus of elasticity of the material of the bar. For a normal mode vibration the general solution is

$$\phi(x_1) = C_1 \cos\frac{\omega x_1}{c} + C_2 \sin\frac{\omega x_1}{c} \quad (10)$$

By introducing the boundary conditions equation (10) results to an eigenvalue problem, the solution of which yields the natural circular frequencies ω_j and mode shapes (eigenvectors) ϕ_j (Thomson and Dahleh 1998).

The general solution of equation (6) by mode superposition is

$$u_1(x_1, t) = \sum_{j=1}^{\infty} \phi_j(x_1)\left(A_j \cos w_j t + B_j \sin w_j t\right) \quad (11)$$

Where the constants A_j and B_j can be determined form the initial conditions. The eigenfunctions ϕ_j also satisfy certain orthogonality relationships.

2.0 Material and methods

The two essential components that determine the vibration of structural systems are the structure's mass distribution and the structure's stiffness (Malekjafarian et al., 2016). These properties are captured in the structure's inertia matrix and stiffness matrix respectively. If the mode shape ϕ_j and circular frequency ω_j are kept constant, then any variation in mass distribution μ will have a corresponding change in the element rigidity EA.

Two equations were compared and equated. One is the force equilibrium equation written as

$$\{F\} + [S]\{D\} = \{F^*\} \quad (12)$$

(the external force vector $\{F^*\}$ acts at the element's nodes)

Where {F} is the vector of fixed end forces generated when nodal displacements are restrained. [S] is the element stiffness matrix and {D} a vector of nodal displacements (Okonkwo 2012).

The second equation is the equation of motion of a vibrating system written simply as

$$[m]\{\ddot{u}\} + [k]\{u\} = \{P\} \quad (13)$$

(the external force vector {P} acts at the element's nodes)

Where $[m]$ is the inertia matrix, $[k]$ is the element stiffness matrix and $\{u\}$ a vector of nodal displacements.

Although equations (12) have been largely applied in statics, it can also be applied in dynamics if the equations for the vector of fixed end moments/forces {F} can be formulated. The real structure (continuous system) was then analyzed using the Hamilton's principle and the equations for the fixed end forces {F} and nodal displacements {D} formulated for any arbitrary segment of a vibrating beam at time t = 0. This was then substituted into equation (12) to get the vector of nodal force {F*} that is causing the vibration.

[k] in equation (13) was taken as the stiffness matrix of the lump-massed beam. If a vibrating element of the real beam and that of a corresponding element of a lump-massed beam are to be equivalent then their deformation must be equal and the force acting on their nodes will also be equal. Therefore

$$\{D\} = \{u\} \quad (14)$$

$$\{F^*\} = \{P\} \quad (15)$$

For a prismatic bar fixed at both ends we obtain from Hamilton's principle the natural frequencies and mode shapes as

$$w_j = \frac{j\pi c}{L} = j\pi\sqrt{\frac{EA}{\mu L^2}} \quad (16)$$

$$\emptyset_j = \sin\frac{j\pi x}{L} \quad (17)$$

$j = 1,2,3, \ldots, \infty$

The second derivative of equation (15) with respect to time is

$$\ddot{u}_1(x,t) = \sum_{j=1}^{\infty} -\omega_j^2 \emptyset_j \left(A_j \cos \omega_j t + B_j \sin \omega_j t\right) \quad (18)$$

By substituting equation (17) into the second derivative of equation (11) at time t = 0 we obtain

$$\ddot{u}_1(x,0) = \sum_{j=1}^{\infty} -\omega_j^2 A_j \sin \gamma_1 x \quad (19)$$

where $\gamma_1 = \frac{j\pi}{L} = \frac{\omega_j}{c}$ (20)

By treating the longitudinally vibrating bar like a beam segment pinned at both ends (see Figure 1), it is possible to obtain the fixed end forces (axial) forces of an arbitrary segment of the bar. The forces at the ends of the isolated segment are F_1 and F_2.

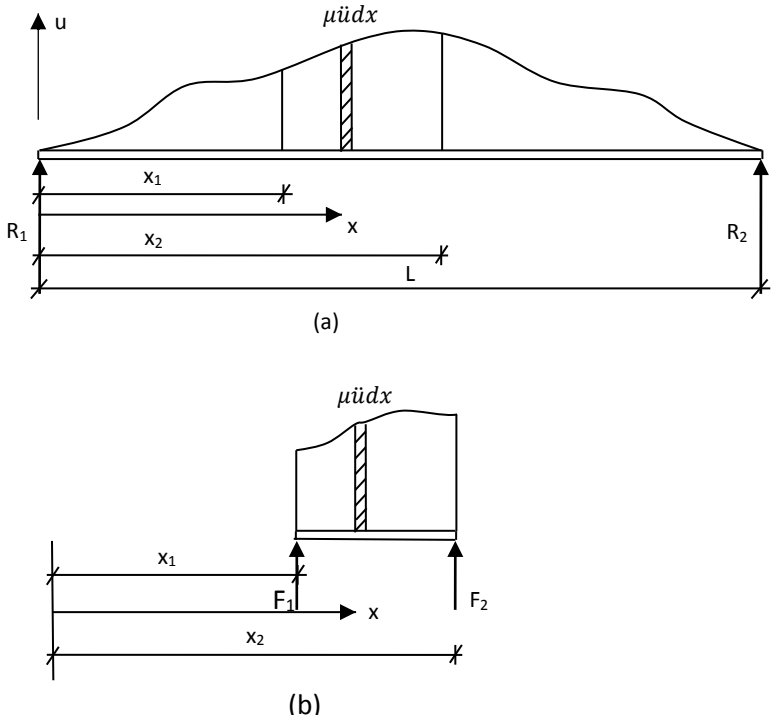

Figure 1

(a) A bar under longitudinal vibration due to inertial forces $\mu\ddot{u}$

(b) A segment of the bar under longitudinal vibration due to inertial forces $\mu\ddot{u}$

Using the equations of external equilibrium

$\sum M_2 = 0; \quad F_1(x_2 - x_1) + \int_{x_1}^{x_2} \mu\ddot{u}(x_2 - x)dx = 0$

$$F_1 = \frac{1}{(x_2 - x_1)} \sum_{j=1}^{\infty} \frac{{\omega_j}^2 A_j \mu}{\gamma_1^2} (\gamma_1 x_2 \cos \gamma x_1 - \gamma_1 x_1 \cos \gamma x_1 - \sin \gamma_1 x_2 + \sin \gamma_1 x_1) \quad (21)$$

$\sum F_y = 0; \quad F_2 = -\int_{x_1}^{x_2} \mu\ddot{u}dx - F_1$

$$F_2 = \sum_{j=1}^{\infty} \frac{\omega_j^2 A_j \mu}{\gamma_1^2} \left[\frac{-\gamma_1 L \cos \gamma_1 x_2 + \gamma L \cos \gamma_1 x_1}{L} - \frac{\gamma_1 x_2 \cos \gamma_1 x_1 - \gamma_1 x_1 \cos \gamma_1 x_1 - \sin \gamma_1 x_2 + \sin \gamma_1 x_1}{x_2 - x_1}\right] \quad (22)$$

These forces can be expressed in terms of EA rather than w_j from equation (16) and by normalizing the length of the bar L to be equal to unity and the distances x_1 and x_2 expressed in dimensionless units we obtain

$$F_1 = \frac{EA}{L(\xi_2-\xi_1)}\sum_{j=1}^{\infty} A_j[j\pi\xi_2 \cos j\pi\xi_1 - j\pi\xi_1 \cos j\pi\xi_1 - \sin j\pi\xi_2 + \sin j\pi\xi_1] \quad (23)$$

$$F_2 = \frac{EA}{L}\sum_{j=1}^{\infty} A_j\left[-j\pi \cos j\pi\xi_2 + j\pi \cos j\pi\xi_1 - \frac{j\pi\xi_2 \cos j\pi\xi_1 - j\pi\xi_1 \cos j\pi\xi_1 - \sin j\pi\xi_2 + \sin j\pi\xi_1}{\xi_2-\xi_1}\right] \quad (24)$$

Recall that the constant A_j depends on the initial conditions of the vibrating bar.

The axial force due to self weight at any point x along the length of the bar is given by

$$P_x = \mu g\left(\frac{L}{2} - x\right) \quad (25)$$

where μ is the mass per unit length of the bar and g is the acceleration due to gravity.

If the axial deformation on the infinitesimal element dx is du, then from Hooke's law

$$P_x = EA\frac{du}{dx} \quad (26)$$

By equating equation (25) to equation (26) and integrating

$$u(x,0) = \frac{e}{L}(Lx - x^2) \quad (27)$$

Where e is a dimensionless constant equal to $\frac{\mu gL}{2EA}$.

$$A_j = \frac{\mu}{M_j}\int_0^l u_1(x_1,0)\phi_j dx_1 = \frac{\mu eL^2}{M_j}\left(\frac{2-\gamma_1 L \sin\gamma_1 L - 2\cos\gamma_1 L}{\gamma_1^3 L^3}\right) \quad (28)$$

The generalized mass can be expressed as

$$M_j = \mu\int_0^L \emptyset_j^2\, dx = \frac{\mu L}{2} \quad (29)$$

Equation (29) above is an expression for the constant A_j for a bar under an initial displacement caused by its self weight. Equation (29) can be substituted into the equation (23) and (24) to obtain the values of the fixed end forces F_1 and F_2. With these equations the force equilibrium equations for segments of a vibrating beam can be written and the inherent forces in the system that is causing motion calculated at the nodes/junctions of the element. An arbitrary segment of a vibrating element is identified by means of the normalized distances ξ_1 and ξ_2 of its nodes from an origin. ξ_1 and ξ_2 are numbers between 0 and 1.

Having obtained the fixed end forces F_1 and F_2, these are substituted into equation (12) to obtain the nodal forces {F*} in the real bar which from equation (15) are equal to {P}.

$$P_1 = F_1 + \frac{EA}{\xi_2-\xi_1}(u_1 - u_2) \quad (30)$$

$$P_2 = F_2 + \frac{EA}{\xi_2-\xi_1}(-u_1 + u_2) \quad (31)$$

Where

$$\{F\} = \begin{Bmatrix} F_1 \\ F_2 \end{Bmatrix} \quad (32)$$

$$\{u\} = \begin{Bmatrix} u_1 \\ u_2 \end{Bmatrix} \quad (33)$$

$$\{P\} = \begin{Bmatrix} P_1 \\ P_2 \end{Bmatrix} \quad (34)$$

u_1 is the total displacement at the position x_1 while u_2 is the total displacement at the position x_2. The total displacement is obtained by totaling the displacements due to all the modes of vibration. A segment of a vibrating bar can be isolated and will be

in equilibrium with the application of the force vector {P}. The force {P} represents the effect of the removed adjourning elements on the isolated segment.

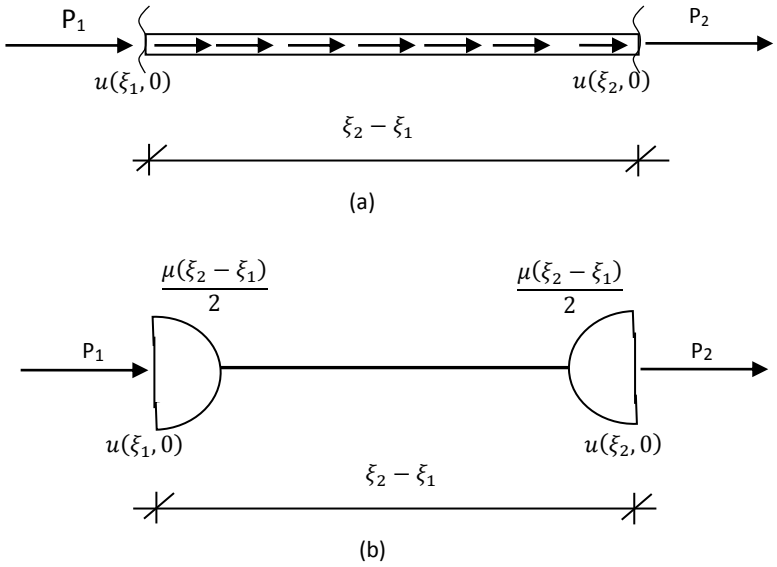

Figure 2

(a) An isolated segment of the longitudinally vibrating continuous bar showing the nodal forces P_1 and P_2
(b) An equivalent lumped massed segment showing the nodal forces

Figure 2a shows a segment of the vibrating continuous or real bar. The nodal forces on the bar P_1 and P_2 are calculated from the equilibrium equations (equation 30 and 31). When the continuous bar is represented by a lumped massed bar which is a bar that has its distributed masses lumped at selected nodes, the equivalent segment of the bar is shown in Figure 2b. Just like the real segment the equivalent segment is supported by the same nodal forces P_1 and P_2 and has the same nodal displacements as the real bar. This implies that for the lumped massed beam to be equivalent to the real beam they must share the same inherent forces and displacements at the nodes. To achieve this equality the stiffness matrix of the lumped massed bar is modified.

The equation of motion for the lumped massed bar is given as

$$[m]\{\ddot{u}\} + [k_d]\{u\} = \{P\} \tag{35}$$

Where [m] is the inertial matrix, {u} is a vector of nodal displacement and k_d is the stiffness of the lumped massed segment under consideration.

The proposed stiffness matrix for the lumped massed segment k_d is

$$[k_d] = \begin{bmatrix} \frac{EA}{l}\alpha_1 & -\frac{EA}{l}\alpha_2 \\ -\frac{EA}{l}\alpha_2 & \frac{EA}{l}\alpha_1 \end{bmatrix} \tag{36}$$

where α_1 and α_2 are the stiffness modification factors for longitudinal vibration. They help redistribute the stiffness of the lumped massed bar in such a way as to annul the effect of the discretization of the bar due to the lumping of its distributed mass on selected nodes.

$$[m] = \begin{bmatrix} \frac{\mu(\xi_2 - \xi_1)}{2} & 0 \\ 0 & \frac{\mu(\xi_2 - \xi_1)}{2} \end{bmatrix} \tag{37}$$

μ is the mass per unit length of the beam.

When treating the isolated segment of the vibrating beam alone the vector of nodal acceleration is written as

$$\{\ddot{u}\} = \begin{Bmatrix} \ddot{u}(\xi_1, 0) \\ \ddot{u}(\xi_2, 0) \end{Bmatrix} = \begin{Bmatrix} -\omega^2 u(\xi_1, 0) \\ -\omega^2 u(\xi_2, 0) \end{Bmatrix} = \begin{Bmatrix} -\omega^2 u_{11} \\ -\omega^2 u_{21} \end{Bmatrix} \quad (38)$$

ω is the fundamental frequency of the vibrating mass while u_{11} and u_{21} are the values of u_1 and u_2 for the first mode only. By rearranging equation (35) we obtain

$$\alpha_1 = \frac{-(\xi_2-\xi_1)u_{11}\left(P_1+\frac{(\xi_2-\xi_1)\pi^2 u_{11}}{2}\right)+(\xi_2-\xi_1)u_{21}\left(P_2+\frac{(\xi_2-\xi_1)\pi^2 u_{21}}{2}\right)}{u_{21}^2-u_{11}^2} \quad (39)$$

$$\alpha_2 = \frac{(\xi_2-\xi_1)u_{11}\left(P_2+\frac{(\xi_2-\xi_1)\pi^2 u_{21}}{2}\right)-(\xi_2-\xi_1)u_{21}\left(P_1+\frac{(\xi_2-\xi_1)\pi^2 u_{11}}{2}\right)}{u_{21}^2-u_{11}^2} \quad (40)$$

Equations (39) and (40) can be used to evaluate the stiffness modification factors for longitudinal vibration of a segment of a fixed-fixed or fixed-pinned bar located between ξ_1 and ξ_2 of the bar's total length. A numerical demonstration of their use is presented below. For ease of presentation the calculations were presented in a tabular form.

Example 1: when $\xi_1 = 0, \xi_2 = 0.3$

$\xi_1 = 0,\ \xi_2 = 0.3$					
j	Aj	F_{1j}	F_{2j}	u_{1j}	u_{2j}
1	0.25801227546560	0.11478175044198	0.21934693877846	0	0.20873631560902
2	0	0	0	0	0
3	0.00955601020243	0.08022004251217	0.09549849578482	0	0.00295296955097
4	0	0	0	0	0
5	0.00206409820372	0.03930310611130	-0.0068803273457	0	-0.0020640982037
6	0	0	0	0	0
7	0.00075222237745	0.01576740240345	-0.0149577678401	0	0.00023244949818
8	0	0	0	0	0
9	0.00035392630379	0.00905258916811	0.00683642625235	0	0.00028633239453
Total		**0.25912489063701**	**0.29984376562978**	**0**	**0.21014396884897**

$u_{11} = 0$

$u_{21} = 0.20873631560902$

From equations 30 and 31

$P_1 = -0.95960478680024$

$P_2 = 0.40063613053345$

From equations 39 and 40 the stiffness modification factors for longitudinal vibration of the element are

$\alpha_1 = 1.01993444314165$

$\alpha_2 = 1.37916315711590$

Table 1: Calculation of the Stiffness modification factor for an element positioned at $\xi_1 = 0, \xi_2 = 0.3$ on a fixed-fixed bar under longitudinal vibrationj is the mode number, j = 1 stands for the first mode, j = 2 for the second mode and so on. The values of the paramaters A_j, F_{1j}, F_{2j}, u_{1j} and u_{2j} are evaluated for modes 1 – 9 and summed to obtain end forces F_1 and F_2 and the end displacements u_1 and u_2.

Table 1 is an illustration on how the inherent nodal forces P_1 and P_2 and the stiffness modification factors α_1 and α_2 are calculated. The nodal forces P_1 and P_2 are the forces acting at the selected nodal point if the beam segment under consideration is decomposed. These nodal forces represent the effect of the removed adjacent beam segment on the beam segment under consideration. Using the methods presented in table 1 the values of stiffness modification factors at different values of ξ_1 and ξ_2 for the longitudinal vibration of a fixed-fixed bar are presented in Table A1 in the Appendix. A sample matlab program for the calculation of the stiffness modification factors for a segment of a beam restrained at both end can be found the Appendix B.

3.0 Results and Discussions

For the beam of Figure 3a the stiffness matrix and inertia matrix of the bar with respect to the coordinate of the lumped mass are

$$k = \frac{4EA}{L} \quad (41)$$

$$m = \frac{1}{2}\mu L \quad (42)$$

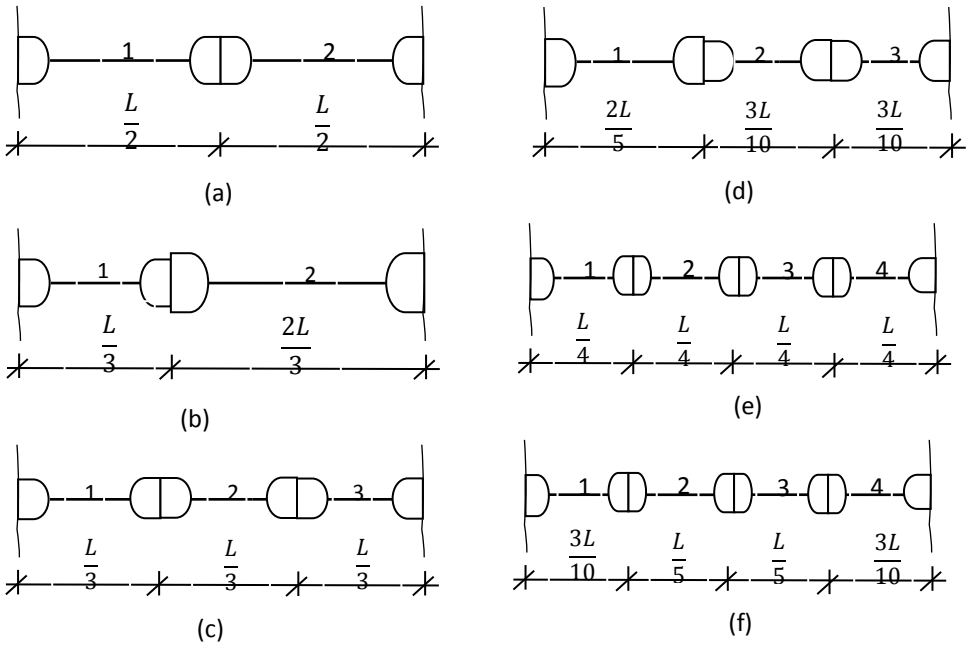

Figure 3: Some lumped massed beams constrained at both ends used for illustration of Lagrange equation

By substituting equations (41) and (42) into equation (3) and solving we obtain

$$\lambda = \frac{0.125\mu L^2}{EA} \quad (43)$$

$$\{\phi\} = 1 \quad (44)$$

$$\omega = 2.8284\sqrt{\frac{EA}{\mu L^2}} \quad (45)$$

From Appendix A the stiffness modification factors of the two segments/elements of the bar are

For element 1: $\xi_1 = 0$, $\xi_2 = 0.5$, $\alpha_1 = 1.233701$, $\alpha_2 = 1.859611$

For element2: $\xi_1 = 0.5$, $\xi_2 = 1$, $\alpha_1 = 1.233701$, $\alpha_2 = 1.859611$

By applying these stiffness modification factors, the modified stiffness matrix of the bar with respect to the coordinate of the lumped mass becomes

$$k = \frac{4.934804EA}{L} \quad (46)$$

By using this modified stiffness on equation (46) the new values of λ, natural frequency and mode shape obtained are

$$\lambda = \frac{0.1013211467\mu L^2}{EA} \quad (47)$$

$$\{\phi\} = 1 \quad (48)$$

$$\omega = 3.14159\sqrt{\frac{EA}{\mu L^2}} \quad (49)$$

These were repeated for the bars of Figures 3b, 3c, 3d, 3e and 3f and a summary of the obtained natural frequencies presented in table 2.

Table 2: Comparism of the obtained Natural frequencies of different lump-massed fixed-fixed bar under longitudinal vibration with their exact values.

	Mode No	**Hamilton (Exact)**	**Lagrange**	**Percentage Error (%)**	**Lagrange with modified stiffness**	**Percentage Error (%)**
Figure (a)	1	3.1416	2.8284	9.97	3.1416	0
Figure (b)	1	3.1416	3.0000	4.51	3.1416	0
Figure (c)	1	3.1416	3.0000	4.51	3.1416	0
	2	6.2832	5.1962	17.30	5.4486	13.28
Figure (d)	1	3.1416	2.9646	5.63	3.1416	0
	2	6.2832	5.4863	12.68	5.6096	10.72
Figure (e)	1	3.1416	3.0615	2.55	3.1416	0
	2	6.2832	5.6569	9.97	5.6593	9.93
	3	9.4248	7.3910	21.58	7.3611	21.90
Figure (f)	1	3.1416	2.9940	4.70	3.1416	0
	2	6.2832	5.7735	8.11	5.6649	9.84

3	9.4248	8.6237	8.50	8.2736	12.21

From table 2, it would be observed that the natural frequencies obtained from the use of Lagrange equation on the continuous system had some measure of errors as seen from its comparison with exact results (results from the use of Hamilton's principle). The errors depended on the number of subdivisions of the bar and the non-uniformity of the lengths of the bar segments. However when the stiffness of the system was modified using the stiffness modification factors, the use of Lagrange's equation was able to predict accurately the fundamental frequencies irrespective of the number of subdivisions or length of segments hence their percentage errors were zero. The values of the higher frequencies obtained from the used of the stiffness modification factors remained approximate.

4.0. Conclusion

Using the matlab program in the appendix the stiffness modification factors were generated and used for the solution of different lumped massed beams. Their results were studied and the following conclusions drawn

1) In order to obtain an accurate dynamic response from a lumped massed beam there must of necessity be a modification in the stiffness composition of the system (the finite element method actually does the opposite). Since the lumping of the continuous mass has altered the inertia matrix the matrix ceases to represent well the mass distribution of the structure. The stiffness matrix is the only matrix left for a corresponding redistribution to amend the error.
2) No linear modification of the stiffness distribution of lumped mass fixed-fixed beams under longitudinal vibration can cause them to be dynamically equivalent to the continuous beams. This is so because the values of α_1 and α_2 obtained for each segment as shown in Appendix A are not equal.

This work has laid a foundation on the possible modification in the stiffness matrix of lumped masses structures in order to obtained improved result.

5.0 Recommendation

The use of lumped masses as a simple idealization for continuous systems has gained a lot of relevance in the field of structural dynamics. While this work was limited to beams, it can also be extended to frames and other two dimensional structures like plates. This will greatly simplify the analysis of such complex structures and encourage more dynamic analysis of such structures leading to increased understanding of their behaviour under dynamic load. In order to simplify the analysis only deformation due to bending moment was considered in our analysis. More work can be done in considering the effect of other internal stresses on the obtained stiffness modification factors.

References

Ahan, O., Arisoy, D. O., 2014. Discretization of Continuum Structures: Rayleigh Ritz Method

and Finite Element Direct Method with analysis of Longitudinal Beam Vibration. 3rd International Scientific Conference on Engineering "Manufacturing and Advanced Technologies, Mostar, Bosnia and Herzegovina. Pp 67 – 81.

Ahmad, Z., Campbell, J., 2013. Development of Two-dimensional Solver Code for Hybrid

Model of Energy absorbing System. International Journal of Physical Sciences, Vol 8 (13) pp 510 – 525

Baudet, V., Beuve, M., Jaillet, F., Shariat, B., Zara, F., 2007. Integrating Tensile Parameters in

3D Mass-Spring System. Research Report-LIRIS-UMR. CNRS 5205, Canada.

Beaurepaire, P., Schueller, G. I., 2011. Modelling of the Variability of fatigue Crack growth

using Cohesive Zone Element, Engineering Fracture Mechanics Vol 78 Issue 12 pp 2399-2413 Elsevier

Benaroya, H., Nagurka, M. L., 2010. Mechanical Vibration: Analysis, Uncertainties and

Control 3rd Edition CRC Press Taylor and Frances Group USA

Blake, R. E., 2010. Basic Vibration Theory:Harris' shock and Vibration Handbook 6th Edition,

McGraw Hill, New York

Ezeokpube, G. C., 2002. Dynamic Response of Frames with Stiffened Joints subjected to Lateral

Loads using the Stiffness Method, Unpublished M.Eng Thesis UNN, Enugu

Hutton, D. V., 2004. Fundamentals of Finite Element Analysis, McGraw-Hill,

Singapore.

Kot, M., Nagahashi, H., Szymczah, P., 2015. Elastic Moduli of Simple Mass Spring Models. The

Visual Computer: International Journal of Computer Graphics, Vol 31, Issue 10, Pp 1339 – 1350. Springer- Verlag, New York

Malekjafarian, A., Ashory, M. R., Khatibi, M. M. SaberLatibari M., 2016. Rigid body stiffness

Matrix for identification of Inertia properties from output-only data. European Journal of Mechanics-A/Solids, Vol 59, September-October 2016, pp 85 – 94. Elsevier

Matthies, H. G., Brenner, C. E., Bucher, C. G., Soares, C. G., 1997. Uncertainties in Probabilistic

Numerical Analysis of Structures and Solids-Stochastic Finite Elements. Structural Safety, Vol 19, Issue 3, pp 283 – 336. Elsevier.

Morgan, D., Qiao, S., 2008. Accuracy and Stability in Mass-Spring Systems for Sound

Synthesis. Proceedings of the C3S2E ’08 Canadian Conference on Computer Science and Software Engineering, Montreal, QC Canada. Pp 104 - 115

Naess, A., Moan, T., 2012. Stochastic Dynamics of Marine Structures. Cambridge University

Press, UK.

Okonkwo, V. O., 2012. Analysis of Multi-storey steel frames, Unpublished MEng

Thesis, Nnamdi Azikwe University, Awka

Rajasekaran, S., 2009. Structural Dynamics of Eathquake Engineering:Theory and Application

using Mathematica and Matlab, Woodhead Publishing Limited Cambridge

Saad, Y., Vorst, H. A. V. 2000. Iterative Solution of Linear Systems in the 20th Century, Journal

of Computational and Applied Mathematics Vol 123, Issue 1-2 pp 1-33

Srinivasan, C. 2015. Dynamic Analysis and Design of Offshore Structures. Springer India

Stephenson, D. A., Agapiou, J. S., 2005. Metal Cutting and Practice, 2nd Edition, CRC Press

USA

Tauchert, T. R., 1974. Energy Principles in Structural Mechanics, International

Student Edition, McGraw-Hill Kogakusha Ltd Tokyo

Thomson, W. T., Dahleh, M. D., 1998. Theory of Vibrations with Applications, 5th

Edition, Prentice Hall New Jersey

Tornabene, F, Nicholas, F., Uberlini, F., Erasmo, V. 2015. Strong Formulation Finite

Element Method based on Differential Quadrature: A Survey, Applied Mechanics Review Vol 67 pp 1-50 ASME

APPENDIX A

Table A1: Stiffness modification factors for the longitudinal vibration of a fixed-fixed/fixed-pinned/pinned-pinned bar

			ξ_2						
			0	0.05	0.10	0.15	0.20	0.25	0.30
ξ_1	0	α_1	-	1.143151	1.058495	0.997834	0.986672	1.000866	1.019934
		α_2	-	1.188747	1.203565	1.228843	1.265503	1.314943	1.379163
	0.05	α_1	1.143151	-	1.080427	1.024910	1.006729	1.012629	1.026512
		α_2	1.188747	-	1.113157	1.115460	1.141255	1.181044	1.232144
	0.10	α_1	1.058495	1.080427	-	0.998704	0.980187	0.981916	0.991600
		α_2	1.203565	1.113157	-	1.014836	1.019911	1.042110	1.074280
	0.15	α_1	0.997834	1.024910	0.998704	-	0.938539	0.935178	0.938885
		α_2	1.228843	1.115460	1.014836	-	0.943689	0.948312	0.962200
	0.20	α_1	0.986672	1.006729	0.980187	0.938539	-	0.901715	0.897092
		α_2	1.265503	1.141255	1.019911	0.943689	-	0.903322	0.902645
	0.25	α_1	1.000866	1.012629	0.981916	0.935178	0.901715	-	0.867017
		α_2	1.314943	1.181044	1.042110	0.948312	0.903322	-	0.868061
	0.30	α_1	1.019934	1.026512	0.991599	0.938885	0.897092	0.867017	-
		α_2	1.379163	1.232144	1.074280	0.962200	0.902645	0.868061	-
	0.35	α_1	1.054605	1.057992	1.018826	0.959383	0.908659	0.867950	0.829199
		α_2	1.460963	1.299001	1.121355	0.990718	0.916692	0.869455	0.828832
	0.40	α_1	1.115179	1.117462	1.074506	1.008167	0.948618	0.897608	0.846355
		α_2	1.564248	1.386386	1.188496	1.039554	0.952085	0.893711	0.841244
	0.45	α_1	1.182917	1.189762	1.146079	1.074437	1.007395	0.947269	0.884015
		α_2	1.694512	1.496212	1.274497	1.104955	1.003103	0.933439	0.868971
	0.50	α_1	1.233701	1.254602	1.215722	1.141712	1.069081	1.000866	0.924602
		α_2	1.859611	1.632023	1.379063	1.183281	1.063227	0.979259	0.898881
	0.55	α_1	1.268354	1.315400	1.288508	1.216097	1.140810	1.066697	0.976738
		α_2	2.071070	1.803974	1.511273	1.283034	1.141149	1.040586	0.940450
	0.60	α_1	1.288113	1.378511	1.374214	1.310002	1.238324	1.165702	1.068050
		α_2	2.346373	2.027226	1.685114	1.418270	1.252950	1.137999	1.020543
	0.65	α_1	1.249068	1.411994	1.447670	1.401772	1.343039	1.284923	1.195354
		α_2	2.713217	2.318450	1.909302	1.591796	1.398286	1.272354	1.146426
	0.70	α_1	1.074514	1.359921	1.462504	1.446515	1.407191	1.374004	1.310103*
		α_2	3.218047	2.702364	2.192812	1.798719	1.559662	1.416893	1.288271*
	0.75	α_1	0.698504	1.194162	1.408082	1.436868	1.416483	1.406445*	1.374004
		α_2	3.944830	3.23164	2.570783	2.059370	1.740833	1.557625*	1.416893
	0.80	α_1	0.001153	0.883447	1.298618	1.409046	1.412313*	1.416483	1.407191
		α_2	5.062014	4.010719	3.125278	2.446031	2.003625*	1.740833	1.559662
	0.85	α_1	-1.459811	0.229120	1.047829	1.340164*	1.409046	1.436868	1.446515
		α_2	6.963446	5.225115	3.975516	3.060516*	2.446031	2.059370	1.798719
	0.90	α_1	-5.085133	-1.343961	0.348648*	1.047829	1.298618	1.408082	1.462504
		α_2	10.832088	7.246460	5.263551*	3.975516	3.125258	2.570783	2.192812
	0.95	α_1	-17.031813	-5.197933*	-1.343961	0.229120	0.883447	1.194162	1.359921
		α_2	22.586202	11.159537*	7.246460	5.225115	4.010719	3.231645	2.702364

	1.00	α_1	-	-17.031813	-5.085133	-1.459811	0.001153	0.698504	1.074515
		α_2	-	22.586202	10.832088	6.963446	5.062014	3.944830	3.218047
			ξ_2						
			0.35	0.40	0.45	0.50	0.55	0.60	0.65
ξ_1	0	α_1	1.054605	1.115179	1.182917	1.233701	1.268354	1.288113	1.249068
		α_2	1.460963	1.564248	1.694512	1.859611	2.071070	2.346373	2.713217
	0.05	α_1	1.057992	1.117462	1.117462	1.254602	1.315400	1.378511	1.411994
		α_2	1.299001	1.386386	1.386386	1.632023	1.803974	2.027226	2.318450
	0.10	α_1	1.018826	1.074506	1.074506	1.215722	1.288508	1.374214	1.447670
		α_2	1.121355	1.188496	1.188496	1.379063	1.511273	1.685114	1.909302
	0.15	α_1	0.959383	1.008167	1.008167	1.141712	1.216097	1.310002	1.401772
		α_2	0.990718	1.039554	1.039554	1.183281	1.283034	1.418270	1.591796
	0.20	α_1	0.908659	0.948618	0.948618	1.069081	1.140810	1.238324	1.343039
		α_2	0.916692	0.952085	0.952085	1.063227	1.141149	1.252950	1.398286
	0.25	α_1	0.867949	0.897608	0.897608	1.000866	1.066697	1.165702	1.284923
		α_2	0.869455	0.893711	0.893711	0.979259	1.040586	1.137999	1.272354
	0.30	α_1	0.829199	0.846355	0.846355	0.924602	0.976738	1.068050	1.195354
		α_2	0.828832	0.841244	0.841244	0.898881	0.940450	1.020543	1.146426
	0.35	α_1	-	0.806627	0.806627	0.854040	0.883238	0.951720	1.069273*
		α_2	-	0.804377	0.804377	0.833896	0.850730	0.903873	1.010934*
	0.40	α_1	0.806627	-	0.810954	0.820405	0.825416	0.861619*	0.951720
		α_2	0.804377	-	0.808189	0.810737	0.805463	0.827032*	0.903873
	0.45	α_1	0.830575	0.810954	-	0.825638	0.816815*	0.825416	0.883238
		α_2	0.820765	0.808189	-	0.823439	0.808272*	0.805463	0.850730
	0.50	α_1	0.854040	0.820405	0.820405	-	0.825638	0.820405	0.854040
		α_2	0.833896	0.810737	0.810737	-	0.823439	0.810737	0.833896
	0.55	α_1	0.883238	0.825416	0.816815*	0.825638	-	0.810954	0.830575
		α_2	0.850730	0.805463	0.808272*	0.823439	-	0.808189	0.820765
	0.60	α_1	0.951720	0.861619*	0.825416	0.820405	0.810954	-	0.806627
		α_2	0.903873	0.827032*	0.805463	0.810737	0.808189	-	0.804377
	0.65	α_1	1.069273*	0.951720	0.883238	0.854040	0.830575	0.806627	-
		α_2	1.010934*	0.903873	0.850730	0.833896	0.820765	0.804377	-
	0.70	α_1	1.195354	1.068050	0.976738	0.924602	0.884015	0.846355	0.829199
		α_2	1.146426	1.020543	0.940450	0.898881	0.868971	0.841244	0.828832
	0.75	α_1	1.284923	1.165702	1.066697	1.000866	0.947269	0.897608	0.867949
		α_2	1.272354	1.137999	1.040586	0.979259	0.933439	0.893711	0.869455
	0.80	α_1	1.343039	1.238324	1.140810	1.069081	1.007395	0.948618	0.908659
		α_2	1.398286	1.252950	1.141149	1.063227	1.003103	0.952085	0.916692
	0.85	α_1	1.401772	1.310002	1.216097	1.141712	1.074437	1.008167	0.959383
		α_2	1.591796	1.418270	1.283034	1.183281	1.104955	1.039554	0.990718
	0.90	α_1	1.447670	1.374214	1.288508	1.215722	1.146079	1.074506	1.018826
		α_2	1.909302	1.685114	1.511273	1.379063	1.274497	1.188496	1.121355
	0.95	α_1	1.411994	1.378511	1.315400	1.254602	1.189762	1.117462	1.057992
		α_2	2.318450	2.027226	1.803974	1632023	1.496212	1.386386	1.299001

	1.00	α_1	1.249068	1.288113	1.268354	1.233701	1.182917	1.115179	1.054605
		α_2	2.713217	2.346373	2.071070	1.859611	1.694512	1.564248	1.460963

			ξ_2						
			0.70	0.75	0.80	0.85	0.90	0.95	1.00
ξ_1	0	α_1	1.074514	0.698504	0.001153	-1.459811	-5.085133	-17.031812	-
		α_2	3.218047	3.944830	5.062014	6.963446	10.832088	22.586202	-
	0.05	α_1	1.359921	1.194162	0.883447	0.229120	-1.343961	-5.197933*	-17.031812
		α_2	2.702364	3.231645	4.010719	5.225115	7.246460	11.159537*	22.586202
	0.10	α_1	1.462504	1.408082	1.298618	1.047829	0.348648*	-1.343961	-5.085133
		α_2	2.192812	2.570783	3.125258	3.975516	5.263551*	7.246460	10.832088
	0.15	α_1	1.446515	1.436868	1.409046	1.340164*	1.047829	0.229120	-1.459811
		α_2	1.798719	2.059370	2.446031	3.060516*	3.975516	5.225115	6.963446
	0.20	α_1	1.407191	1.416483	1.412313*	1.409046	1.298618	0.883447	0.001153
		α_2	1.559662	1.740833	2.003625*	2.446031	3.125258	4.010719	5.062014
	0.25	α_1	1.374004	1.406445*	1.416483	1.436868	1.408082	1.194162	0.698504
		α_2	1.416893	1.557625*	1.740833	2.059370	2.570783	3.231645	3.944801
	0.30	α_1	1.310103*	1.374004	1.407191	1.446515	1.462504	1.359921	1.074515
		α_2	1.288271*	1.416893	1.559662	1.798719	2.192812	2.702364	3.218047
	0.35	α_1	1.195354	1.284923	1.343039	1.401772	1.447670	1.411994	1.249068
		α_2	1.146426	1.272354	1.398286	1.591796	1.909302	2.318450	2.713217
	0.40	α_1	1.068050	1.165702	1.238324	1.310002	1.374214	1.378511	1.288113
		α_2	1.020543	1.137999	1.252950	1.418270	1.685114	2.027226	2.346373
	0.45	α_1	0.976738	1.066696	1.140810	1.216097	1.288508	1.315400	1.268354
		α_2	0.940450	1.040586	1.141149	1.283034	1.511273	1.803974	2.071070
	0.50	α_1	0.924602	1.000866	1.069081	1.141712	1.215722	1.254602	1.233701
		α_2	0.898881	0.979259	1.063227	1.183281	1.379063	1.632023	1.859611
	0.55	α_1	0.884015	0.947269	1.007395	1.074437	1.146079	1.189762	1.182917
		α_2	0.868971	0.933439	1.003103	1.104955	1.274497	`1.496212	1.694512
	0.60	α_1	0.846355	0.897608	0.948618	1.008167	1.074506	1.117462	1.115179
		α_2	0.841244	0.893711	0.952085	1.039554	1.188496	1.386386	1.564248
	0.65	α_1	0.829199	0.867949	0.908659	0.959383	1.018826	1.057992	1.054605
		α_2	0.828832	0.869455	0.916692	0.990718	1.121355	1.299001	1.460963
	0.70	α_1	-	0.867017	0.897092	0.938885	0.991599	1.026512	1.019934
		α_2	-	0.868061	0.902645	0.962200	1.074280	1.232144	1.379163
	0.75	α_1	0.867017	-	0.901715	0.935178	0.981916	1.012629	1.000866
		α_2	0.868061	-	0.903322	0.948312	1.042110	1.181044	1.314943
	0.80	α_1	0.897092	0.901715	-	0.938539	0.980187	1.006729	0.986672
		α_2	0.902645	0.903322	-	0.943689	1.019911	1.141255	1.265503
	0.85	α_1	0.938885	0.935178	0.938539	-	0.998704	1.024910	0.997834
		α_2	0.962200	0.948312	0.943689	-	1.014836	1.115460	1.228845

	0.90	α_1	0.991598	0.981916	0.980187	0.998704	-	1.080427	1.058495
		α_2	1.074280	1.042110	1.019911	1.014836	-	1.113157	1.203565
	0.95	α_1	1.026512	1.012629	1.006729	1.024910	1.080427	-	1.143151
		α_2	1.232144	1.181044	1.141255	1.115460	1.113157	-	1.188747
	1.00	α_1	1.019934	1.000866	0.986672	0.997834	1.058495	1.143151	-
		α_2	1.379163	1.314943	1.265503	1.228843	1.203565	1.188747	-