JEAS

JOURNAL OF ENGINEERING AND APPLIED SCIENCES

Journal of Engineering and Applied Sciences, Volume 16, Number 1, January 2020, 12-21

Analytical Evaluation of Voltage Drop along 11/0.415KV Distribution Lines and Within Agu-Awka Injection Substation Distribution Network

Okafor Chukwunenye .S[1*], Idigo Victor.E[2],Ezechukwu Oseloka.A[3]and Alumona Theophilus.L[4]
[1]PhD. Scholar, Dept. of Electronic & Computer Engineering Nnamdi Azikiwe University, Awka
[2, 4]Department of Electronic & Computer Engineering Nnamdi Azikiwe University, Awka
[3]Dept. of Electrical Engineering Nnamdi Azikiwe University, Awka
[*]CorrespondingAuthor's E-mail:nechuko@gmail.com

Abstract
Electrical distribution system is becoming more complex because of rapid and continuous increase in electricity demand. The quality of power reaching electricity consumers through distribution networks is poor. This work involves investigation, evaluation and analysis of voltage drop in power distribution network in Nigeria with reference to Agu-Awka injection substation distribution network in Anambra State. The work includes studying the hourly load readings of the feeders so as to ascertain their load profile, determine the peak and off-peak loading periods and finally take the following voltage readings from 11/0.415KV distribution transformers within one of the station's feeders - Ifite feeder during the peak and off-peak periods respectively. The readings taken were as follows; voltage values from various 11/0.415KV transformers (bus voltages) and received voltages at consumers' houses were taken using Avo-meter, the distance of each consumer's house to the transformer supplying it was also taken with a measuring tape. After evaluating and analyzing the various readings, it was observed that, with radial distribution system being operational in network under review, that as the length of the distribution line (distributor) increases, the voltage drop along the same line increases too and as such, the received voltages at consumers' houses decreases. For consumers to receive optimal voltage values that is within the statutory limit of voltage variations of ±10% of rated value as stated by American National Standards Institute (ANSI C84.1), the distribution transformers during network planning stage should be properly positioned and that the size and length of distribution line should be such that the voltage at consumer's terminals is within the permissible limits of $90\% < V < 106\%$.

Keywords: Injection substation, Distribution transformer, Voltage drop, Distribution feeder, Radial feeder system, Distributor.

1. Introduction

Nigerian's power sector is characterized by inadequate, erratic and inefficient power supply with poor voltage level (Ohajianya et al. 2014). Since the country's independence, electricity consumers are not only confronted with insufficient power supply and erratic nature of the available power but also with power supply having high level of voltage drop (Olowasegun 2015; Adejumobi and Adebisi 2012).

Voltage Drop: Voltage drop can be defined as the amount of voltage loss that occurs through all or part of a circuit due to impedance (http://en.wikipedia.org/wiki/voltagedrop). Cables or conductors used in distributing power have resistance or impedance associated with them. The longer the length of the conductor, the greater the accumulated resistance or impedance and the more this impedance, the greater the voltage drop. Voltage drop is a major problem in many distribution networks especially those operating at low voltages and those feeding large loads over long distance at poor power factor. To maintain voltage level within required limits in these networks is challenging especially with the expected future demands (Elsherif, BenGhuzzi and Baaiu2015).
The issues of voltage drop in distribution network have become a frequent thing in power sector as it has negative effects on the optimum functioning, reliability and life span of the household electronics and electrical appliances

(Roshan and Tshewang 2008). For instance it affects the lighting illumination. Distribution section of electric power system has the highest percentage of power losses and it requires economical system to provide electrical energy at a suitable cost and at a minimum voltage drop.

2.0 Review of Related Research Works

The major portion of occurrence of power losses is the distribution systems, which widens the gap between the demand and supply of the electricity. Electric power providers have a responsibility to ensure that the consumers are always supplied with the required/proper voltage level. However, consumers at the extreme end of the feeders have been experiencing low voltage levels and this is due to voltage drops in low voltage distribution systems. Several authors presented works on voltage drop in electric power system generally and in distribution aspect of the system precisely. The authors x-rayed the causes of voltage drop in the network, evaluated the effects on the performance of the network and possible recommendations to minimize the causes of voltage drop.

Soloman, Attachie and Duah (2012) developed a research paper which looked into the effects of voltage drop on the 11KV GMC sub-transmission feeder in Tarkwa, Ghana were analyzed. The study showed that the voltage drop, total impedance, percentage efficiency and percentage regulation on the feeder are 944V, 4.56Ω, 91.79% and 8.94% respectively. From the conclusion, it is realized that the causes of voltage drop on the feeder was mainly due to high impedance level as compared to the permissible value.

Sarang and Ghodekar (2012) presented a paper, in which a method for energy losses calculation is presented. This research paper explains how the Load factor and load loss factor can be used to calculate the power losses of the network. The results obtained can be used for financial loss calculation and can be presented to regulate the tariff determination process, while the technical losses were seen as losses that occurred in the electrical elements during transmission of energy from source to consumer and mainly comprises of ohmic and iron losses.

Carter-Brown (2002) presented a paper, which consists of optimal voltage regulation limits and voltage drop apportionment in the distribution systems, in which the planner/ designer of a future network assumes the network will be operated in a reasonable manner (voltage control, tap settings, balanced loads and appropriate configuration of normally open points) and apportions the allowable voltage variation between the MV and LV terminals.

Vujosevic, Spahic and Rakocevic (2011) did a research work where the estimate of voltage drop in radial distribution networks was applied for all voltage levels and it was indicated in the work that in distribution system, voltage drop is the major determining factor of power quality and it has a significant influence at normal working regime of electrical appliances, especially motors.

Qureshiand Mahmood(2009) produced a research paper that developed a method statement and guide lines that helps distribution Engineers to show that by reducing the energy losses of the distribution systems, capacity of the system made available may be conserved without requesting for additional capacity. A generalized computer program was used to evaluate any given HT/LT distribution network system and propose capacitor banks at different locations of feeders, different conductor sizes in different portions of system which leads to enhancement of the stability and energy handling capacity of the system at minimum cost.

Begand Armstrong (1989) presented a paper, which explains that system losses include transmission losses and distribution losses. The distribution losses were seen as major contribution to the system losses and are about 70% of the total losses. This distribution losses being major share of the system losses needs special attention for achieving remarkable reduction in loss figure. It was also observed that technical losses result from the nature and type of load, design of electrical installation/ equipment, layout of installations, poor maintenance of the system, under size and lengthy service lines, over-loading and sub-standard electrical equipment.

2.1 Causes of Voltage Drops

The major parameters that causes voltage drops in electric distribution networks are:

- Accumulated impedance in the conductor/cable connected between the transformer and the load.
- Current flowing through the conductor.

Voltage drop as a result of increased impedance in the cable leads to increased voltage drop. The high impedance of the conductor is caused by the following:

i. Under-sized conductor.
ii. Non uniform conductor material.
iii. Hot spot.
iv. Cable jointing and terminations.
v. Conductor length.
vi. Conductor material.
vii. Load increase

Under-sized Conductor: Voltage can be explained as the pressure pushing electric charges along a conductor whereas electrical resistance of the conductor is a measure of difficulty it takes to push these charges along the conductor. Long thin conductor provides more resistance to electric charges as current flows through the conductor to that of short thick conductor. As such, conductor sizes are rated according to the current values that it can conduct. Thus, when smaller sized conductor is used for rated current higher than its capacity, the voltage drop along the conductor is high as a result of increased impedance/resistance by the under-sized conductor.

Non-uniform Conductor Material: The effect of using different types of conductors like All Aluminium Conductor (AAC), All Aluminium Alloy Conductor (AAAC), and Aluminium Conductor Steel Reinforced (ACSR) joined together in a particular distribution network introduces galvanic corrosion. Galvanic corrosion is caused by difference in electrical potential between two or more metals and this leads to voltage drop.

Hot Spot: Whenever a bolted or mechanical joint, conductor or cable terminations are not firmly tight, high resistance point is created at that point. The high resistance formed creates localized heating at that joint and since heating increases oxidation, the joint becomes less tight and as heating continues, the joints tends to glow. As the resistance increases with temperature, a higher voltage drop is created at that point.

Cable jointing and termination: Poor cable joints and terminations are as a result of loose contact between two cables that are joined together but are not firmly, properly joined and terminated. When current flows through this loose contact, there exists high opposition to the flow of current which generates heat at that point. This increase in resistance will lead to voltage drop at that point.

Cable Length: Increase in cable/conductor length of a particular size will increase the value of the resistance along that conductor and this will subsequently increase the voltage drop along that long conductor.
Mathematically,

$$R = \frac{\rho L}{A}$$

Where; R – Resistance of the conductor
ρ – Resistivity of the conductor
L – Length of the conductor
A – Cross sectional area of the conductor

Conductor Material: The nature and type of materials used in making the conductor/cable affects the value of voltage drop along the conductor. For instance, copper cable is a better conductor than aluminum cable and as such will have less voltage drop than aluminum of the same length and size.

Load Increase: Increased current on the distribution line which as a result of load increase leads to increase in voltage drop on that line. Thus, voltage drop on a line varies proportional to the current on the line, with the line impedance being constant.

3.0 Measurement Approach

This work was carried out on four 11/0.415KV distribution transformers along Ifite 11KV feeder within Agu-Awka Injection Substation distribution network. These four transformers were designated in the Single line diagram showing part of the Ifite 11KV feeder as; TR 5, TR 6, TR 7 and TR 8. The single line diagram showing part of Agu-Awka Injection substation that supplies the 11KV feeder under review (Ifite feeder) and the single line diagram showing part of Ifite feeder together with the four 11/0.415KV distribution transformers under review are shown in figures 3.1 and 3.2;

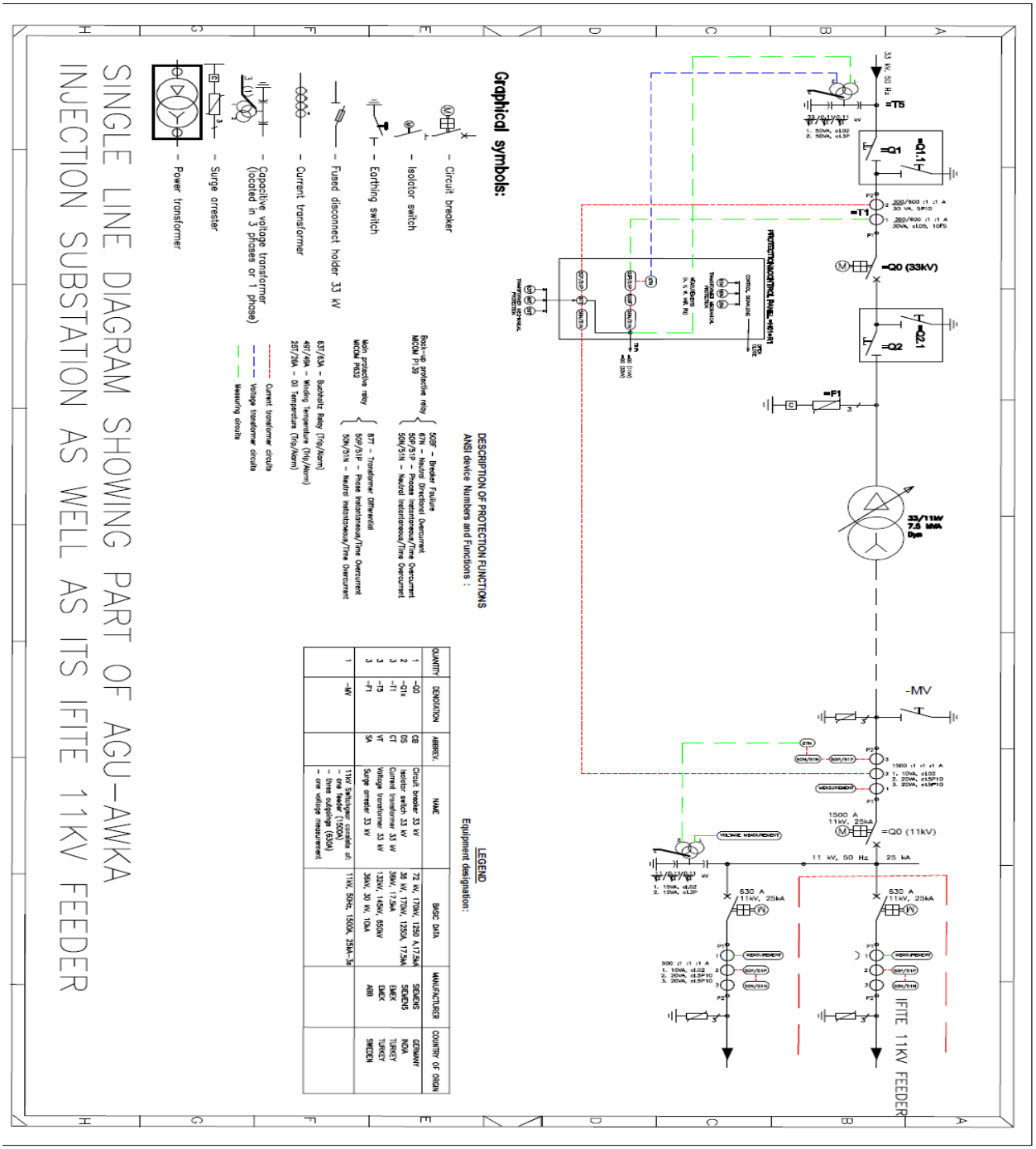

Figure 3.1: Single Line Diagram showing Part of Agu-Awka Injection Substation as well as Ifite 11KV Feeder

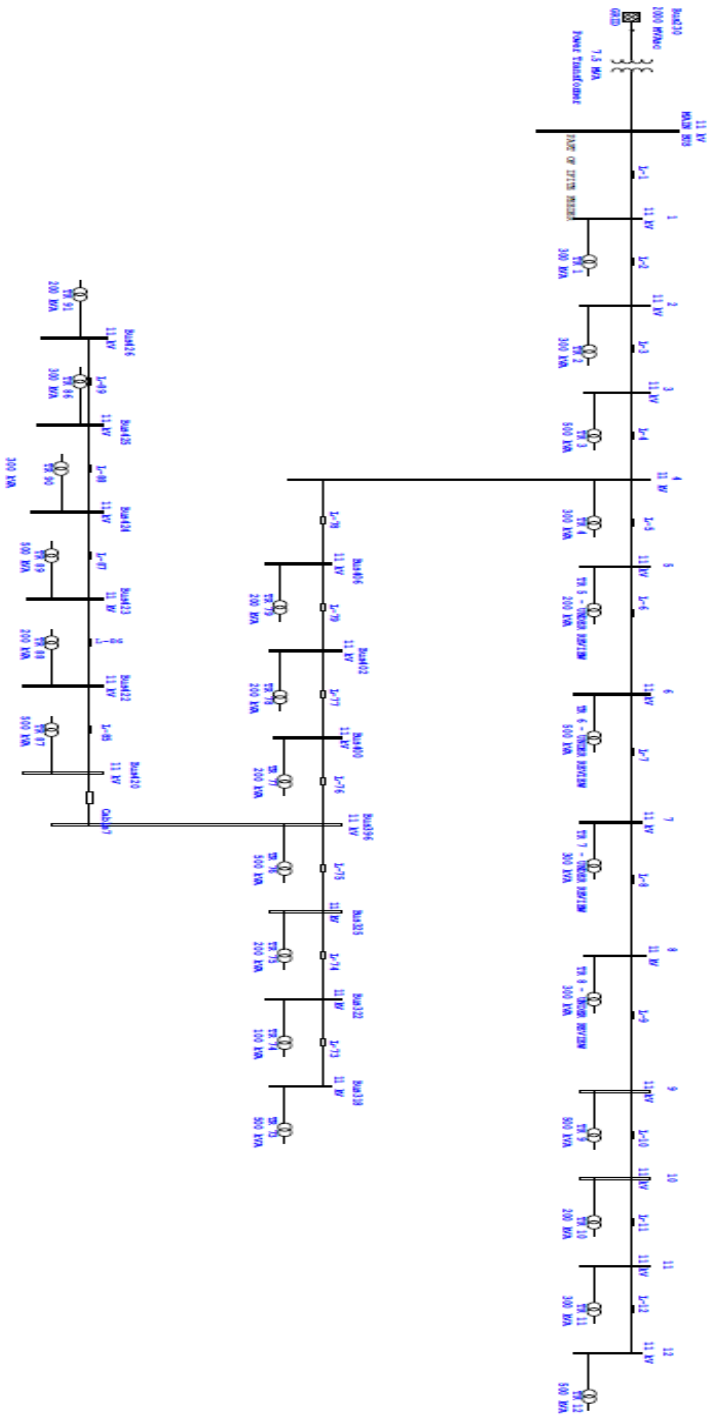

Figure 3.2: Single Line Diagram Showing Part of Ifite 11KV Feeder as well as four (4no.) 11/0.415KV Transformer

Initially, the study of Injection substation's feeders hourly load readings was carried out from the daily log book so as to ascertain the peak and off-peak loading periods respectively. The peak periods of this feeder are within 6:00hours to 7:00hours and 19:00hours to 21:00hours while the other time durations are regarded as off-peak loading periods. Voltage readings were taken for both peak and off-peak periods from various consumers' houses supplied by these four transformers using Avo-meter and the respective house distance from thetransformer was also taken using a measuring tape. Voltage drop with respect to measured distance was also calculated. These

measurements were carried out preferably between 6:00hours to 7:00hours for peak period and 12:00hours to 13:00hours for off-peak period from January to June 2017. The average received voltages, voltage drops with respective distances were calculated from these measured received voltage values and the values were shown for both peak and off-peak periods respectively:

Table 3.1: Showing various distribution transformer bus voltages for both peak & off-peak periods

Supplied or bus voltage values of Transformers during peak loading period				Supplied or bus voltage values of Transformers during off-peak loading period			
TR 5	**TR 6**	**TR 7**	**TR 8**	**TR 5**	**TR 6**	**TR 7**	**TR 8**
220	200	205	200	220	208	212	207

Table 3.2: Shows average received voltage readings, voltage drops with their respective distances for four selected distribution transformers along Ifite 11KV feeder and within Agu-Awka distribution network during peak loading period

Measured Distances (meters)	Received Voltages (volts)				Voltage Drops (volts)			
D (m)	**TR 5**	**TR 6**	**TR 7**	**TR 8**	**TR 5**	**TR 6**	**TR 7**	**TR 8**
50	220	208	212	207	0	0	0	0
100	219.5	205	210	204	0.5	3	2	3
150	215	202	206	200	5	6	6	7
200	208	196	198	195	12	12	14	12
250	200	192	191	191	20	16	21	16
300	195	188	187	188	25	20	25	19
350	192	185	183	186	28	23	29	21
400	189	182	181	176	31	26	31	31
450	187	179	178	172	33	29	34	35
500	186	177	176	170	34	31	36	37

Table 3.3: Shows average received voltage readings, voltage drops with their respective distances for four selected distribution transformers along Ifite 11KV feeder and within Agu-Awka distribution network during off-peak loading period.

Measured Distances (meters)	Received Voltages (volts)				Voltage Drops (volts)			
D (m)	**TR 5**	**TR 6**	**TR 7**	**TR 8**	**TR 5**	**TR 6**	**TR 7**	**TR 8**
50	220	208	212	207	0	0	0	0
100	219.5	205	210	204	0.5	3	2	3
150	215	202	206	200	5	6	6	7
200	208	196	198	195	12	12	14	12
250	200	192	191	191	20	16	21	16
300	195	188	187	188	25	20	25	19
350	192	185	183	186	28	23	29	21
400	189	182	181	176	31	26	31	31
450	187	179	178	172	33	29	34	35
500	186	177	176	170	34	31	36	37

4.0 Mathematical Modeling of Voltage Drop

To model the voltage drop along the line under review, various parameters that affect or lead to drop of voltage along the line were considered. The parameters include surface area or diameter of the conductor, the materials (conductor) resistivity, the resistance of the line and the applied load (power).

Let, Surface Area of the conductor – A; Conductor Material Resistivity – p; Resistance of the line – R; Length of the line – L; Load or Power consumed – P; Voltage drop –V. Recall that voltage

$$V = IR \tag{1}$$

$$R = \rho \frac{L}{A} \tag{2}$$

Substituting equation (2) into equation (1);

$$V = I \times \rho \frac{L}{A} \tag{3}$$

Also recall that load on the line or power is;

$$P = IV \tag{4}$$

Thus,

$$V = \frac{P}{I} \tag{5}$$

Therefore, the Voltage drop along the line can be modeled by the summation of all the parameters that leads to drop of voltage on the line.

$$V_d = I \times \frac{\rho L}{A} - \frac{\rho}{I'} \tag{6}$$

Also, voltage drop can as well be determined based on the measured value of the received voltage at consumer's end (Vr) and the supplied voltage value (bus voltage) measured at feeder pillar of the 11/0.415KV distribution transformer (Vs). That is;

$$V_d = V_s - V_r \tag{7}$$

5.0 Results

The various received voltage readings, voltage drops with respective distances for both peak and off-peak periods were as shown in Tables 3.2 and 3.3 respectively. The readings of the supplied voltage from each of the distribution transformers (transformer bus voltages) for both peak and off-peak periods were also stated below in Table 3.1.

6.0 Analysis

To properly evaluate and analyse the study, graphs that show the voltage profile or actual received voltages at consumers' houses were plotted from the readings obtained for both peak and off-peak loading periods.

The graphs are as follows:

i. Graph of actual received voltages against their various distances.
ii. Graph of voltage drops against various distances.

For peak loading period:

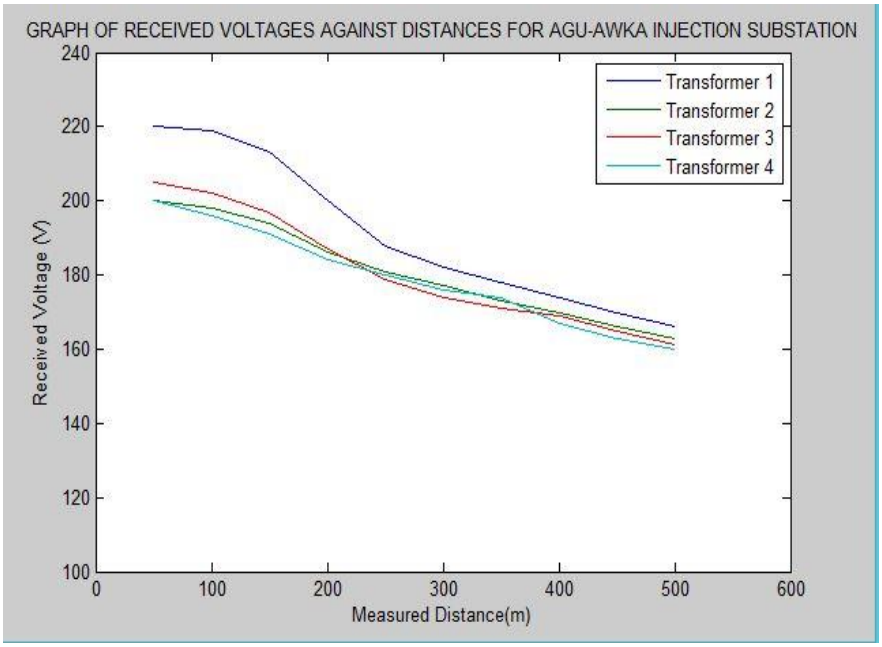

Figure 6.1: Graph of actual received voltages against respective distances

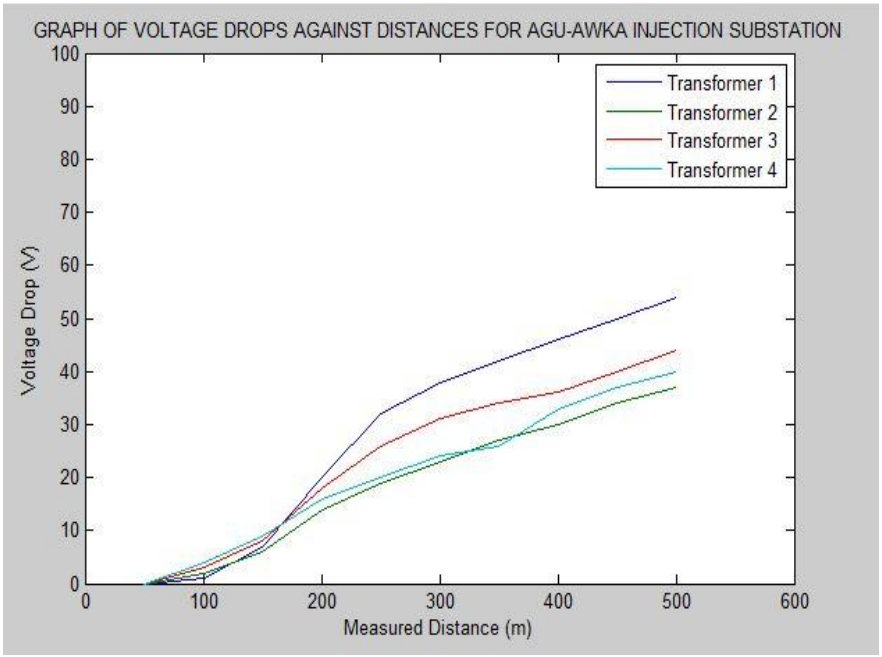

Figure 6.2: Graph of voltage drops against respective distances

For off-peak loading period:

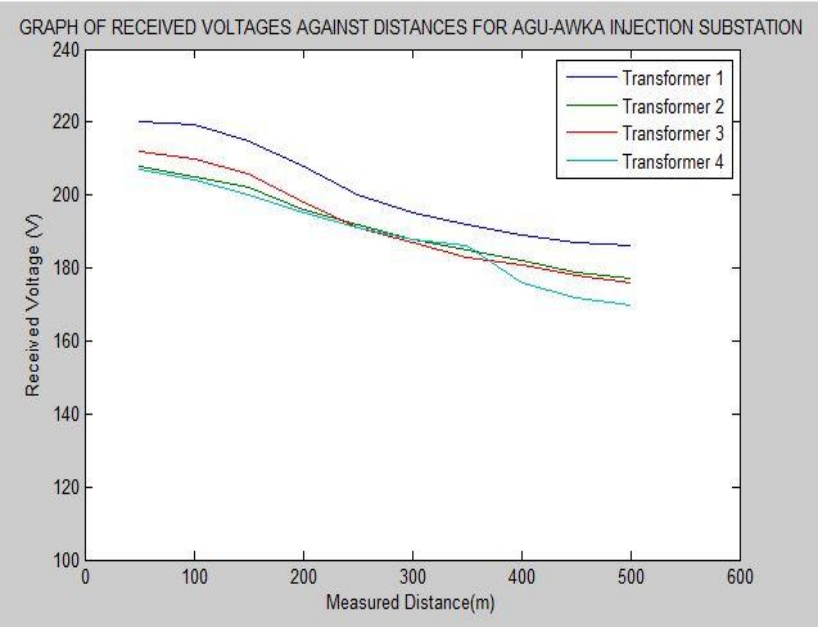

Figure 6.3: Graph of actual received voltages against respective distances

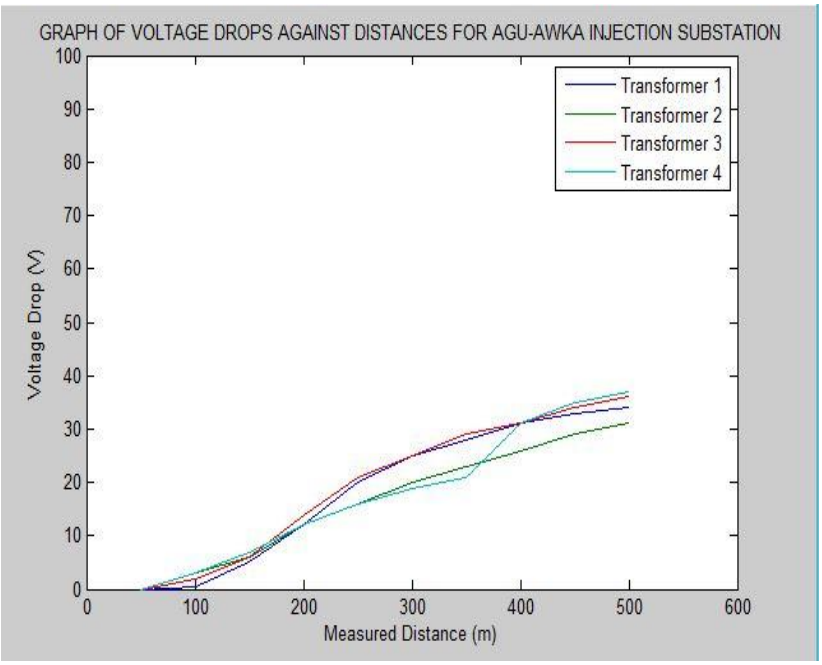

Figure 6.4: Graph of voltage drops against respective distances

Analyzing the work using Figures 6.1, 6.2, 6.3 and 6.4 shows that:

i. Graphs of actual received voltages against distances for Ifite feeder within Agu-Awka Injection Substation distribution network for both peak and off-peak periods are similar.
ii. Graphs of voltage drops against distances for Ifite feeder within Agu-Awka Injection Substation distribution network for both peak and off-peak periods are similar.

iii. Graphs of actual received voltages against distances for Ifite feeder within Agu-Awka Injection Substation distribution network shows that the farther the distance of the consumer's premises from the distribution transformer, the lower the consumer's average received voltage for both peak and off-peak periods.

iv. Graphs of voltage drops against distances for Ifite feeder within Agu-Awka Injection Substation distribution network shows that the farther the distance of the consumer's premises from the distribution transformer, the higher the voltage drop for both peak and off-peak periods.

7.0 Conclusion

This work shows that the longer the distribution line, the higher the voltage drops and as well, the lower the actual voltage received at premises of power consumers.

8.0 Recommendations

To ensure that the voltage values delivered to consumers by distribution transformers are within the statutory limit of voltage variations at consumers' terminals, the following recommendations are made:

i. Proper distribution network planning to regulate the size and length of the distributor such that voltage at consumer's terminals is within the permissible limit.

ii. Installation of automated voltage compensator like automated shunt capacitor along the distribution feeder that will be automatically switched ON to compensatethe line whenever there is voltage drop below the standard limit and will be automatically switched OFF when the voltage is within the accepted standard limit so that the automated system will not over-compensate the distribution line.

iii. Ensuring that the voltage control system or regulation part of distribution power transformers like the On-load and Off-load tap-changing system used for power supply regulation are very effective and active. Ensure as well that the remote digital On-load Tap- changer Voltage Controller of the transformer is also working for more efficient voltage regulation operation.

References

Adejumobi, I.A., Adebisi, O.I.2012. Power loss reduction on primary distribution networks using tap-changing technique. International Journal of Research and Reviews in Applied Sciences.Vol. 10, pp. 272 – 279.

Beg, D., Armstrong, J.R.1989. Estimation of Technical Losses for Distribution System Planning. IEEE Power Engineering Journals. Vol. 3, pp. 337 – 343.

Carter-Brown, C.G.2002. Optimal Voltage Regulation Limits and Voltage drop Apportionment in Distribution Systems. 11th Southern African Universities Power Engineering Conference.pp. 318 – 322.

Elsherif, M.A., BenGhuzzi, A.M., Baaiu, A.A.2015.Voltage Stability for 11kV Libyan Distribution Network to Address Future Requirements. International Journal of Innovative Research in Science.Vol. 4,pp. 6247 – 6254.

Ohajianya, A.C., Abumere, O.E., Owate, I.O., Osarolube, E.2014. Erratic Power Supply in Nigeria: Causes and Solutions. International Journal of Engineering Science Invention. Vol. 3, pp. 51-55.

Olowasegun, A.S.2015. The Erratic Electric Power Supply in Nigeria: Causes and Remedy. https://www.researchgate.net/publication/303544564.

Qureshi, S.A., Mahmood, F.2009. Evaluation by Implementation of Distribution System Planning for Energy Loss Reduction. Pal. J. Engineering. & Applied Science. Vol. 4, pp. 43 – 45.

Roshan, C., Tshewang, L.2008. Voltage Profile in Distribution System. https://www.researchgate.net/publication/279854028.

Sarang, P., Ghodekar, J.G.2012. Computation of Technical Power Loss of Feeders and Transformers in Distribution System using Load Factor and Load Loss Factor. International Journal of Multidisciplinary Sciences and Engineering. Vol. 3.

Soloman, N., Attachie, J.C., Duah, F.N.2012. An Investigation into the Causes and Effects of Voltage drops on 11KV Feeder. Canadian Journal of Electrical and Electronics Engineering. Vol.3.

Voltage drop at [online].http://en.wikipedia.org/wiki/voltagedrop [accessed on 24/06/17].

Vujosevic, L., Spahic E., Rakocevic D.2011. One Method for the Estimation of Voltage drop in Distribution System, http://www.docstoc.com/document/ education.