UJEAS

UNIZIK JOURNAL OF ENGINEERING AND APPLIED SCIENCES

UNIZIK Journal of Engineering and Applied Sciences 6(4), December (2026), 3971-3983
Journal homepage: https://journals.unizik.edu.ng/index.php/ujeas
PRINT ISSN: 2992-4383 || ONLINE ISSN: 2992-4391

A Smart Wireless Hazard Reporting System with Automated SMS Notification for Enhanced Emergency Response

Odo, K.O.[1]*, Omosun, Y.[2], and Nwaorgu, O.A.[3], Nweke, B.C.[4]
[1,2,3]Department of Electrical and Electronic Engineering, Michael Okpara University of Agriculture, Umudike, Abia State
Department of Engineering, Michael Okpara University of Agriculture, Umudike, Abia State
Corresponding Author's E-mail: odo.kingsley@mouau.edu.ng

Abstract
Early detection of hazardous conditions and prompt communication are important in reducing injuries, loss of life and damage to property during incidents such as fire and gas leakage. This study developed and evaluated a smart wireless hazard reporting system that automatically sends SMS notifications when a hazardous condition is detected. The system combined an Arduino Uno microcontroller with a flame sensor, MQ-2 gas/smoke sensor, DHT22 temperature sensor, GSM communication module, audible alarm and LCD display. These components worked together to continuously monitor environmental conditions and provided immediate notification when a possible hazard occurs. Rather than relying on a single sensing device, the design used information from multiple sensors to improve hazard detection and minimise unnecessary alarms. When the system identifies a hazardous condition, it activates a local audible warning and automatically sends an SMS message through the GSM network to predefined emergency contacts. The prototype was developed and tested under controlled laboratory and non-laboratory conditions. Twenty experimental trials were conducted to assess its performance. The collected results were examined using descriptive statistical measures, including the mean, standard deviation, variance and confidence interval. Performance was further assessed in terms of detection accuracy, detection time, SMS delivery time, SMS delivery success rate, false alarm rate and overall system reliability. Results from the twenty trials showed a mean hazard detection time of 0.837 ± 0.016 s and a mean SMS delivery time of 3.226 ± 0.070 s. This produced an average total response time of 4.063 ± 0.073 s. The 95% confidence interval for the total response time ranged from 4.03 to 4.10 s. The relatively narrow interval indicates that the response times remained consistent across the experimental trials. The system also achieved a detection accuracy of 96.7%, a false alarm rate of 3.3% and an SMS delivery reliability of 98%. These results indicate that the developed system can provide a relatively fast and dependable means of detecting hazardous conditions and communicating emergency information. Overall, the developed smart wireless hazard reporting system provides a low-cost and practical approach to improving emergency notification in homes, offices, laboratories, schools, warehouses and light industrial environments. Its reliance on GSM-based SMS communication also reduces dependence on continuous internet connectivity. Future improvements could incorporate cloud-based data logging and artificial intelligence techniques to support historical analysis, intelligent hazard classification and more advanced emergency response functions.

Keywords: Wireless hazard reporting system, hazard detection, SMS notification, emergency response, Arduino Uno, fire detection, gas leakage detection.

1. Introduction

Hazards are events or conditions that have the potential to cause injury, loss of life, damage to property, environmental harm or disruption to normal activities. They may arise from natural events such as floods, earthquakes and storms or from human activities and technological failures, including fire outbreaks, gas leakages, industrial accidents, structural collapse, road traffic accidents and electrical faults. Regardless of their origin, the impact of a hazardous event can become more severe when information about the incident is not communicated quickly. For this reason, hazard reporting remains an important part of disaster and emergency management because it provides a means of communicating information from an affected location to those responsible for responding to the incident (United Nations Office for Disaster Risk Reduction, [UNDRR], 2023).
The speed at which information reaches emergency responders can influence the outcome of an incident. Where reporting is delayed, a relatively manageable situation may develop into a more serious emergency, resulting in greater risk to human life and property. Conventional emergency reporting continues to depend largely on telephone calls, physical reporting at emergency centres and direct verbal communication. Although these methods remain useful, they depend heavily on human involvement. During an emergency, an affected person may be injured, confused or unable to provide sufficient information about what is happening. Communication may also be affected by network congestion and delays in reaching the appropriate emergency personnel (Federal Emergency Management Agency [FEMA], 2022).
The use of sensors and embedded systems provides an opportunity to reduce some of this dependence on manual reporting. Wireless Sensor Networks (WSNs), for example, consist of distributed sensing devices that monitor environmental conditions and communicate the information collected from their surroundings. Depending on the

intended application, sensors may be used to measure temperature, humidity, smoke, gas concentration, vibration, water level and other physical conditions. A typical sensor node consists of a sensing element, a microcontroller, a communication interface and a power source (Odo et al., 2024).

WSN technology has been applied across several fields because of its ability to collect environmental information continuously and with limited human intervention. Applications have been reported in environmental monitoring (Faseth et al., 2010), healthcare systems (Hussain et al., 2013), industrial process monitoring (Misra et al., 2015), smart agriculture (Mohan et al., 2020), home automation (Lee et al., 2010), traffic management (Jain et al., 2011) and fire monitoring. Within hazard detection applications, this capability makes it possible to identify changes in environmental conditions and communicate relevant information soon after they occur (Al-Okby et al., 2021).

Developments in embedded electronics and mobile communication have also made it possible to build relatively inexpensive systems for environmental monitoring and emergency notification. Microcontroller-based embedded systems are particularly useful because they can receive information from sensors, process the readings and control other devices according to programmed conditions. Their relatively small size, low power requirements and affordability have contributed to their use in many monitoring and automation applications. When a microcontroller is combined with a wireless communication technology such as the Global System for Mobile Communications (GSM), information can be transmitted from the monitoring location to a remote user without requiring a conventional wired communication network (Monk, 2022).

GSM is particularly relevant to emergency reporting because of its support for Short Message Service (SMS). SMS allows short text messages to be transmitted over mobile communication networks and can operate without a continuous internet connection. This is useful in locations where internet access is unreliable or unavailable. SMS messages can also be received on basic mobile phone, which reduces the requirement for smartphones, dedicated applications or broadband internet services. These characteristics make SMS a practical communication option for emergency notification, particularly in areas where access to more advanced communication infrastructure remains limited (GSMA, 2024).

A wireless hazard reporting system can therefore combine sensing, processing and communication functions within a single platform. Sensors are used to observe environmental conditions, while a microcontroller interprets their readings and determines whether the measured conditions indicate a possible hazard. Once the programmed hazard criteria are satisfied, the system can activate a warning device and transmit a predefined notification to emergency personnel or other designated contacts. Automating these operations reduces the amount of human intervention required between the occurrence of a detectable hazard and the transmission of an emergency notification (Akyildiz et al., 2021).

Several studies have explored the use of Arduino boards, GSM modules, Global Positioning System (GPS) receivers, wireless sensors and Internet of Things (IoT) technologies for monitoring and emergency communication. Internet-connected solutions provide useful features such as remote dashboards, cloud storage and real-time data analysis. However, their effectiveness depends on the availability and stability of an internet connection. This requirement may limit their usefulness in areas where internet services are unreliable. GSM-based SMS notification provides an alternative because emergency information can be transmitted through the cellular network without requiring continuous internet access (Khan et al., 2022).

Against this background, this study focuses on the design and development of a smart wireless hazard reporting system with automated SMS notification. The system uses sensors to monitor selected environmental conditions and an Arduino Uno microcontroller to process the sensor readings. A GSM communication module provides the means of transmitting SMS notifications when a hazardous condition is detected. The purpose of the design is to shorten the time between hazard detection and notification while providing a simple and affordable system that can operate with minimal human intervention.

1.1 Statement of the Problem

Fire outbreaks, gas leakages and other hazardous incidents remain a concern in homes, schools, workplaces, markets, laboratories and industrial environments because of the threat they pose to human life and property. While preventing every hazardous incident may not be possible, detecting dangerous conditions early and communicating the information promptly can reduce the extent of the resulting damage. One major difficulty, however, is that emergency information does not always reach the appropriate person or authority soon enough.

Conventional hazard reporting depends considerably on human action. In many situations, someone must first notice the incident, determine its seriousness and then make a telephone call or physically report the situation. This sequence introduces a delay between the occurrence of the hazard and the point at which assistance is requested. The delay can become more serious when an incident occurs in an unattended location or when the individuals present are unable to communicate effectively.

The circumstances surrounding an emergency can also make manual reporting difficult. A person exposed to fire, smoke or gas may be injured, confused or under considerable pressure and may therefore be unable to provide clear information about the incident. Telephone communication may also be affected by network congestion or difficulty reaching the appropriate emergency contact. In such situations, relying entirely on an individual to detect and report a hazard may reduce the effectiveness of the emergency response.

Another limitation of conventional approaches is the absence of automatic monitoring and notification. Ordinary fire or gas alarms may provide a warning to people within the immediate environment, but this information may not reach someone who is away from the affected location. Consequently, a hazardous condition could continue for some time before an appropriate person becomes aware of it.

Therefore, there is a need for a system that can monitor selected environmental conditions, identify a potential hazard and communicate a warning without waiting for a person to initiate the reporting process. This study addresses this need through the development of a smart wireless hazard reporting system that combines multiple sensors with a microcontroller and GSM-based SMS communication. When a predefined hazardous condition is detected, the system provides a local warning and automatically sends an SMS notification to designated contacts. The intention is to reduce reporting delays, improve the availability of hazard information and provide an affordable means of supporting emergency response in locations where continuous internet connectivity may not be available.

1.2 Review of Related Empirical Studies

Bhattacharya *et al.* (2011) developed an Internet-SMS wireless hazard communication system designed to send warning messages through GSM infrastructure. Their system was able to disseminate hazard information within approximately 10–50 seconds, demonstrating that SMS could provide a practical means of communicating warnings during emergency situations. However, the system did not incorporate multiple environmental sensors for detecting different types of hazards.

Asif *et al.* (2014) developed an automated GSM-based fire alarm system that combined smoke and temperature sensors with an AVR microcontroller. When a possible fire condition was detected, the system transmitted an SMS alert to the designated recipient. The prototype was relatively inexpensive and was considered suitable for both household and industrial applications. However, its detection capability was mainly centred on fire-related conditions.

Verdouw *et al*. (2018) examined the application of Internet of Things (IoT) technologies within high-risk industries. Their review showed that IoT technologies could support continuous monitoring, improve access to information and assist decision-making during emergency situations. At the same time, the authors identified interoperability and security as important challenges that still need to be addressed when IoT technologies are deployed in safety-critical environments.

Oluwaseun *et al.* (2021) proposed SEN-IoT, an emergency notification system that incorporated Arduino, environmental sensors and GSM communication technology. The system was designed to detect hazardous conditions and communicate relevant information to designated users. Based on the experimental evaluation reported in the study, the system demonstrated satisfactory functionality, maintainability and reliability for managing hazards within domestic environments.

Al-Okby *et al.* (2021) reviewed mobile technologies used for detecting hazardous gases. Their study highlighted developments in wireless sensing, IoT technologies and GSM-enabled alarm systems and discussed how these technologies could support improved safety in industrial environments. The study demonstrated the increasing importance of combining sensing and wireless communication technologies for early detection and reporting of dangerous environmental conditions.

Saravanan *et al*. (2022) reviewed IoT-based fire alarm and extinguisher systems that incorporated GSM modules for SMS and telephone-call notifications. Their findings indicated that automated communication could help reduce the time required to notify responsible persons after a fire has been detected. However, much of the work considered in their study concentrated specifically on fire incidents rather than providing a broader system capable of monitoring different types of hazards.

Esposito *et al.* (2022) examined IoT-enabled early warning systems developed for natural hazards such as floods, earthquakes, tsunamis and landslides. Their review showed that the use of edge and fog computing could improve the speed at which sensor information is processed and reduce delays in emergency communication. The authors also observed that these technologies could contribute to the reliability of early warning systems, particularly where rapid processing of environmental data is required.

Elechi *et al*. (2022) developed an integrated hazard management system that used GSM communication to provide wireless notification. Unlike systems designed around a single type of hazard, their system was capable of detecting several conditions, including fire, gas leakage, flooding and intrusion. Information about detected hazards was transmitted wirelessly to a central control unit, demonstrating the possibility of combining different hazard-monitoring functions within a single system.

A review of these studies shows that considerable progress has been made in the development of automated hazard detection and emergency notification systems. Nevertheless, some practical limitations remain. A number of existing systems depend on internet connectivity, which may affect their usefulness in areas where internet services are unavailable, unstable or expensive. Systems that rely on cloud infrastructure may also introduce additional deployment and operating costs. Furthermore, although several studies have investigated individual fire, gas and environmental monitoring systems, the integration of multiple hazard sensors with GSM-based SMS notification is still relatively limited in simple, low-cost system designs.

This study addresses these limitations through the development of a low-cost wireless hazard reporting system capable of monitoring more than one hazardous condition and automatically transmitting SMS notifications through a GSM network. The design does not require continuous internet connectivity for emergency notification. This makes the proposed system particularly relevant to homes, schools, laboratories, offices and similar environments where an affordable and straightforward hazard notification system is required.

2.0 Materials and methods

The materials used for the development of the system were grouped into hardware and software components. The main hardware component was an Arduino Uno based on the ATmega328P microcontroller, which served as the central processing and control unit of the system. At SIM900D GSM module was used for SMS communication, while an infrared flame sensor and MQ-2 gas/smoke sensor were used for hazard detection. Other hardware components included a push button, 16 × 2 LCD, buzzer, light-emitting diodes (LEDs), relay module, 12 V DC power supply, BC547 transistor, LM7805 voltage regulator, LM2596 buck converter, capacitors, resistors, veroboard and connecting wires.

The software tools used for the study were the Arduino Integrated Development Environment (Arduino IDE) and Proteus simulation software. The Arduino IDE was used to develop and upload the control program to the Arduino Uno, while Proteus was used to simulate and examine the operation of the electronic circuit before the physical prototype was assembled.

2.1 Method

The study adopted an experimental system development and performance evaluation approach. This involved designing, constructing and testing a smart wireless hazard reporting system capable of detecting selected hazardous conditions and automatically sending Short Message Service (SMS) notifications to designated recipients.

The development process involved integrating the sensing, processing, communication and notification sections of the system. The sensors continuously monitored the surrounding environment for conditions associated with hazards such as gas leakage, smoke and flame. Signals obtained from the sensors were sent to the Arduino Uno microcontroller, where they were processed according to the conditions defined in the control program. The user interface and local warning components provided information and alerts at the location of the system, while the GSM module provided communication with users at remote locations.

When the measured condition exceeded the programmed threshold or a hazard was detected, the microcontroller initiated the appropriate response. This included activating the local warning mechanism and instructing the GSM module to send an SMS notification to a predefined telephone number. In this way, the system could communicate the presence of a detected hazard without requiring the user to manually initiate the notification.

Following the integration of the hardware and software components, the completed prototype was subjected to experimental testing under different hazard conditions. The evaluation focused on important performance parameters, including hazard detection accuracy, system response time, SMS communication reliability and power consumption. Repeated tests were carried out to determine whether the system could consistently identify the selected hazards and communicate the corresponding warning within an acceptable period.

Within the context of this study, the term smart refers to the ability of the developed system to monitor its environment, identify selected hazardous conditions such as gas leakage, smoke, flame or fire, and initiate a response automatically. Once a hazardous condition is confirmed, the system activates a local warning and sends an SMS notification to the designated recipient's mobile phone, allowing appropriate action to be taken without requiring the notification process to be initiated manually.

2.1.1 System Block Diagram

The block diagrams presented in Figures 1 and 2 illustrate the functional arrangement of the developed smart wireless hazard reporting system. They showed the relationship between the input sensors, Arduino Uno microcontroller, GSM communication module, display and warning components. The sensors provided environmental information to the microcontroller, which processes the received signals and controls the appropriate output devices. When a hazardous condition is detected, the system activates the local warning components and uses the GSM module to transmit an SMS notification to the designated recipient.

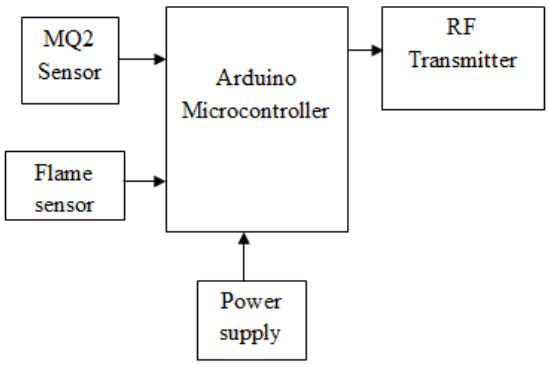

Figure 1: Block diagram of the transmitter

The block diagram in Figure 1 illustrates the transmitter section of the wireless hazard reporting system. The MQ-2 gas sensor and flame sensor continuously monitor the surrounding environment for signs of smoke, combustible gases and fire. The signals obtained from these sensors are sent to the Arduino microcontroller, where they are processed to determine whether the detected condition represents a possible hazard.

Once a hazardous condition is detected, the Arduino generates the required warning message and sends it wirelessly through the RF transmitter to the receiver unit, where the necessary response is initiated. The power supply provides the regulated DC voltage needed by the Arduino, sensors and RF transmitter. This ensures that the components receive the required voltage for stable and reliable operation of the transmitter section.

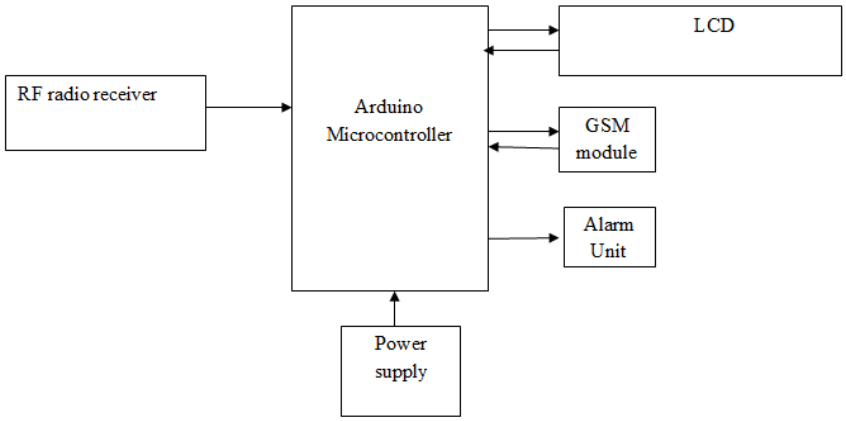

Figure 2: Block diagram of the receiver

The block diagram in Figure 2 shows the receiver section of the smart wireless hazard reporting system with SMS notification. The RF receiver receives the hazard information sent from the transmitter section and passes it to the Arduino microcontroller, which acts as the main control unit of the receiver. The Arduino reads and processes the received information before controlling the other connected components according to the type of hazard detected.

The received hazard information is displayed on the LCD so that anyone close to the system can easily identify the reported condition. At the same time, the alarm unit produces an audible warning to draw the attention of people within the area. The GSM module also sends an SMS containing the hazard information to predefined phone numbers, allowing the appropriate person to be informed even when they are away from the location. A regulated power supply provides the voltage required by the Arduino, RF receiver, LCD, alarm unit and GSM module, allowing the receiver section to operate properly and consistently.

2.1.2 Flowchart of the system

The flowchart of a smart wireless hazard reporting system is shown in Figure 3.

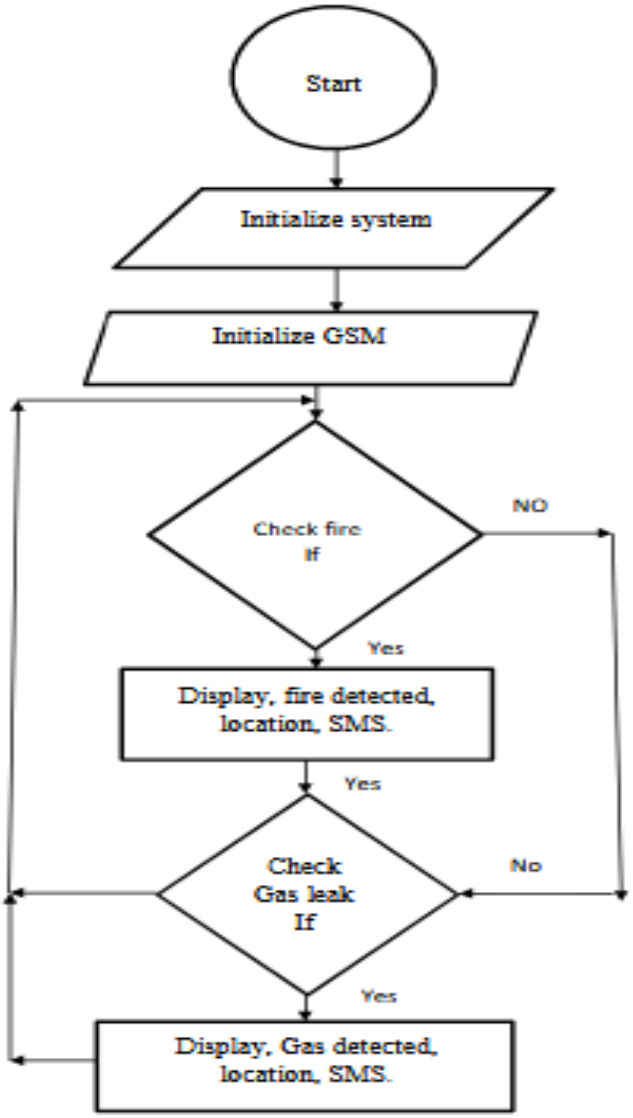

Figure 3: Flowchart of the system

The system begins operation as soon as power is supplied. At start-up, the microcontroller initialises the connected hardware components and sets up the GSM module for communication. After the initialisation process is completed, the system enters its monitoring stage, where the flame sensor continuously checks the surrounding environment for the presence of fire.

When not fire is detected, the system proceeds to check the gas sensor for possible gas leakage. If the flame sensor detects a fire, the microcontroller immediately displays a fire warning on the LCD together with information about the location of the hazard. An SMS alert is then sent through the GSM module to the predefined emergency contact to inform the recipient of the detected fire.

The system also checks for the presence of gas leakage. When a gas leak is detected, a warning message and the corresponding location information are displayed on the LCD, while an SMS notification is sent to the registered phone number. If no gas leakage is detected, the system returns to its normal monitoring state and continues checking the sensors.

This process runs continuously while the system is powered, allowing fire and gas leakage to be detected as they occur. By providing both a local warning and an SMS notification, the system ensures that people within the immediate environment and designated contacts at other locations can be informed of a detected hazard in time to take appropriate action.

2.1.3 Circuit description

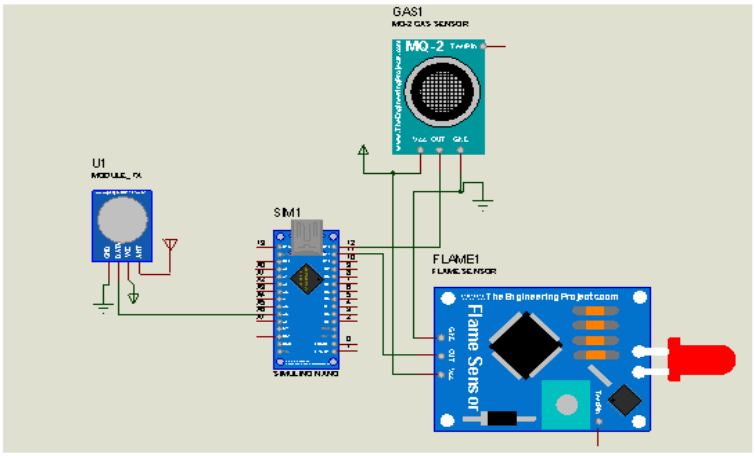

Figure 4: Circuit diagram of the transmitter

The circuit presented in Figure 4 shows the transmitter unit of the smart wireless hazard reporting system with automated SMS notification. The circuit was designed and simulated using Proteus Design Suite before its implementation as part of the complete system. The transmitter unit is responsible for monitoring the surrounding environment for possible fire and gas leakage, processing the signals obtained from the sensors and sending the detected hazard information to the receiver unit. The Arduino Uno acts as the main controller and provides the link between the sensing and communication sections of the transmitter.

Two sensors are used to monitor the environment for the selected hazards. The MQ-2 gas sensor is used to detect smoke and combustible gases, while the flame sensor responds to infrared radiation produced by at flame. During normal operation, the Arduino Uno repeatedly reads the signals coming from both sensors and compares them with the conditions set in the program. This allows the controller to determine whether the environment is in at normal state or whether a possible hazard has occurred.

When smoke or gas leakage is detected by the MQ-2 sensor, the signal is received and processed by the Arduino Uno. In the samet way, at signal from the flame sensor allows the controller to recognise the presence of fire. Based on the sensor responsible for the detection, the Arduino identifies the type of hazard and prepares the corresponding information for transmission. The hazard information is then sent wirelessly from the transmitter unit to the receiver section of the system.

This monitoring process continues for as long as the system remains powered. Under normal conditions, the sensors continue taking readings without triggering an emergency response. Once fire or gas leakage is detected, however, the transmitter sends the relevant information to the receiver unit. At the receiver end, the information is used to activate the audible alarm, display the detected hazard on the LCD and initiate an SMS notification through the GSM module.

The transmitter circuit therefore provides the first stage of the hazard reporting process. It detects changes in the surrounding environment, determines the type of hazard present and communicates that information to the receiver unit. This arrangement allows a detected fire or gas leakage to be reported without waiting for someone to notice the incident and manually raise an alarm, thereby reducing the time between hazard detection and notification.

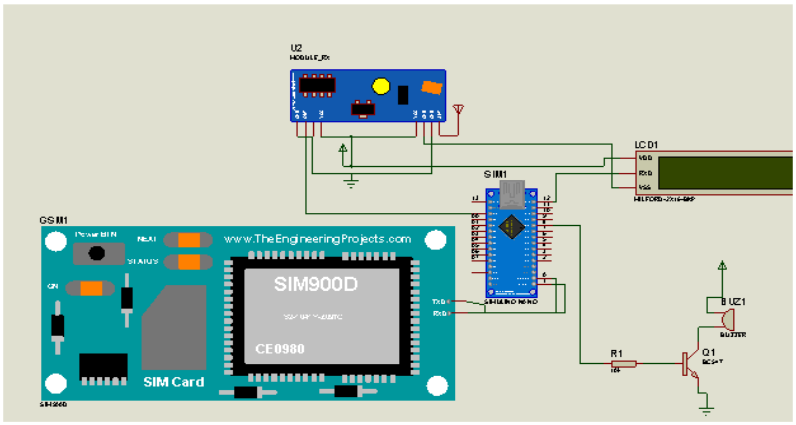

Figure 5: Circuit diagram of the receiver

The circuit presented in Figure 5 shows the receiver unit of the smart wireless hazard reporting system with automated SMS notification. This section of the system receives the hazard information sent from the transmitter and carries out the required warning and notification actions. Once the information reaches the receiver, it is processed by the Arduino Uno, displayed on a 16 × 2 LCD and accompanied by an audible warning from the buzzer. The system also uses a SIM900D GSM module to send an SMS to the emergency contact numbers stored in the program.

The main components of the receiver circuit are the Arduino Uno, SIM900D GSM module, 16 × 2 LCD and buzzer driver circuit. The Arduino Uno serves as the main controller and coordinates the activities of these components. It receives the incoming hazard information, determines what type of hazard has been reported and decides which warning message and actions should follow.

When information about a fire or gas leakage is received from the transmitter, the Arduino first interprets the incoming data to identify the particular hazard. The appropriate warning is then shown on the LCD. For example, a fire incident may produce at "Fire Detected"t message, while the detection of gas may display "gas Leakage." This gives anyone close to the receiver an immediate visual indication of what has been detected.

At the same time, the Arduino activates the buzzer to provide an audible warning. Since the Arduino output alone may not provide the current required to operate the buzzer effectively, a BC547 transistor and base resistor are included as part of the buzzer driver circuit. The transistor allows the low-current control signal from the Arduino to switch the buzzer properly, producing a clear audible alarm when a hazard message is received.

Beyond the warnings provided at the receiver location, the system also informs people who may be some distance away. This is achieved using the SIM900D GSM module, which communicates with the Arduino through a UART serial connection. After identifying the hazard, the Arduino sends the necessary AT commands to the GSM module. These commands instruct the module to prepare and send an SMS containing information about the detected hazard to the phone numbers already programmed into the system. This means that the designated contact can receive information about an incident even when they are not physically present at the monitored location.

When the system is first powered, the Arduino initialises the connected components and prepares the receiver for operation. It then waits for incoming information from the transmitter. If not hazard information is received, the receiver remains in its normal monitoring state. Once a hazard message arrives, the Arduino identifies the type of incident, displays the relevant message on the LCD, sounds the buzzer and initiates the SMS notification through the GSM module.

The receiver unit therefore brings together the different warning functions of the system. It receives and interprets information from the transmitter, provides a visible indication of the detected hazard, sounds a local alarm and extends the warning beyond the immediate location through SMS. In practical terms, this arrangement ensures that a detected fire or gas leakage does not remain only as a sensor reading at the monitored location; it is converted into information that can quickly reach the people expected to respond to the incident.

2.1.4 Design Calculations

Power Supply

Input voltage - 12 V DC Adapter

Required output - 5 V

The voltage regulator selected was 7805

Output voltage, $V_O = 5V$

Filter Capacitor

$Ripplet\ frequency, f = 100Hz$

$Current, I = 0.8A$

Permissible ripple, $V_r = 1V$

$$Capacitance, C = \frac{I}{2fV_r} \quad (1)$$

Substitute

$C = \frac{0.8}{2x100x1} = 0.004F = 400\mu F$

Nearest value of 4700 µF was chosen.

LED Resistor Calculation

Supply, V=5V

LED voltage, $V_f = 2V$

Current = 20 mA

Ohm's Law

$R = \frac{V-V_f}{I} = \frac{5-2}{0.02} = 150\Omega$

Nearest standard value of 220 Ω was chosen.

Base Resistor Calculation

Transistor: BC547

Collector current: 100 mA

Gain,β=100
Base current
$I_B = \frac{I_C}{\beta}$ (2)
$I_B = \frac{100}{100} = 1mA$
Arduino output: 5V
Base-emitter voltage: 0.7V
$R_B = \frac{5-0.7}{0.001} = 4300\ \Omega$
Nearest value of 4.7 kΩ was chosen.

GSM Power Requirement

SIM900D requires at voltage of 4V and peak current of 2A
$Power, P = VI = 4X2 = 8W$
Hence, LM2596 Buck Converter capable of 3 A was chosen.
Power supply selected in this project was 5V 3A

2.2 Experimental Procedure

The developed prototype was evaluated under controlled laboratory conditions. Separate tests were conducted for flame detection, gas detection, elevated temperature, and manual hazard reporting. For each scenario, the sensor response, system processing time, SMS delivery time, alarm activation, and overall system reliability were recorded over multiple trials. Data were analyzed using statistical analysis such as mean, standard deviation, variance and confidence interval and performance metrics such as detection accuracy, false alarm rate, SMS delivery success rate, and average response time to assess the effectiveness of the proposed system.

Mean: The arithmetic mean is:
$\bar{x} = \frac{\sum x_i}{n}$ (3)
where x_i is the response time for the ith trial and n is the number of experimental trials.

Standard deviation: Because these are experimental trials representing at sample, the sample standard deviation is given as:
$SD = \sqrt{\frac{\sum(x_i - \bar{x}\mathrm{t})^2}{n-1}}\mathrm{t}$ (4)

Variance: Variance is simply the square of the sample standard deviation given as;
$s^2 = \frac{\sum(x_i - \bar{x})^2}{n-1}$ (5)

95% confidence interval: The confidence interval is given by
$CI = \bar{x} \pm t_{\propto/2,n-1}\frac{s}{\sqrt{n}}$ (6)

Hazard Detection Accuracy
$Accuracy = \frac{Correctt\ detection}{Totalt\ tests} X100$ (7)

False Alarm Rate
$False\ Alarm = \frac{Falset\ alarms}{Totalt\ tests} X100$ (8)

SMS Delivery Success Rate
$SMS\ success = \frac{Delivered}{Sent} X100$ (9)

Average Response Time

The average response time is computed as
$T_{avg} = \frac{\sum_{i=1}^{n} T_i}{n}$ (10)
Where T_i is the response time for the ith trial and n is the number of experimental trials.

3.0 Results and Discussion

The system was evaluated under controlled laboratory conditions and outside laboratory conditions to determine its effectiveness in detecting hazards, generating local alarms, and transmitting real-time SMS notifications. The key performance metrics considered were mean, standard deviation, variance, confidence interval, hazard detection accuracy, system response time, SMS delivery success rate, false alarm rate, communication reliability, and power consumption. Each experiment was repeated twenty times, and the average values were computed.

3.1 Hazard Detection Performance

The developed system was tested using three different hazard scenarios: flame detection, gas detection, and high-temperature detection. Table 1 summarizes the experimental results.

Table 1: Hazard Detection Performance

Hazard Type	Number of Tests	Correct Detections	Detection Accuracy (%)	False Alarms
Flame	20	20	100.0	0
Gas	20	19	95.0	1
High temperature	20	19	95.0	1
Overall	60	58	96.7	2

The results showed that the flame sensor achieved 100% detection accuracy, indicating high sensitivity to open flames. The MQ-2 gas sensor and DHT22 temperature sensor recorded detection accuracies of 95%, with only one false alarm each. The overall detection accuracy of 96.7%t demonstrated that the integrated multi-sensor approach provided reliable hazard detection suitable for real-time emergency monitoring.

3.2 System Response Time

The response time was measured from the instant a hazard was detected until the activation of the alarm and successful transmission of the SMS notification. In this study, the t-distribution with 19 degrees of freedom for the 95% confidence intervals was considered because n=20. The response time analysis is presented in Table 2.

Table 2: Response Time Analysis

Trials	Detection Time (s)	SMS Delivery Time (s)	Total Response Time (s)
1	0.82	3.25	4.07
2	0.85	3.12	3.97
3	0.83	3.35	4.18
4	0.81	3.18	3.99
5	0.84	3.20	4.04
6	0.86	3.28	4.14
7	0.82	3.16	3.98
8	0.85	3.22	4.07
9	0.83	3.30	4.13
10	0.84	3.18	4.02
11	0.82	3.16	3.98
12	0.86	3.28	4.14
13	0.83	3.35	4.18
14	0.85	3.12	3.97
15	0.81	3.18	3.99
16	0.84	3.20	4.04
17	0.84	3.18	4.02
18	0.86	3,28	4.14
19	0.83	3.30	4.13
20	0.85	3.22	4.07
Mean	0.8370	3.2255	4.0625
Standard Deviation	0.01593	0.06962	0.07283
Variance	0.000254	0.004847	0.005304
95% Confidence Interval	0.8295–0.8445	3.1929–3.2581	4.0284–4.0966

The twenty-trial evaluation showed that the proposed system achieved a mean detection time of 0.837 ± 0.016 s, while the mean SMS delivery time was 3.226 ± 0.070 s. The resulting mean total response time was 4.063 ± 0.073 s. The 95% confidence interval for the total response time was 4.03–4.10 s, indicating relatively low variability across the 20 trials. The narrow confidence interval and small standard deviation suggest that the prototype exhibited consistent response performance under the experimental conditions. However, the result should still be regarded as an estimate of the prototype's performance rather than an exact fixed response time, and further testing with a larger number of automated trials would provide stronger statistical evidence of its reliability and repeatability.

3.3 SMS Notification Performance

The reliability of the GSM communication module was evaluated over fifty SMS transmission attempts. The SMS notification performance is shown in Table 3.

Table 3: SMS Notification Performance

Parameter	Value
SMS sent	50
SMS Delivered	49
Delivery Success Rate	98%
Failed Deliveries	1
Average Delivery Time	3.22 s

The GSM module achieved at 98% SMS delivery success rate confirming reliable communication under normal network conditions. The single failed transmission was attributed to temporary network congestion rather than hardware malfunction.

3.4 False Alarm Analysis

Table 4 presents analysis of false alarm rate.

Table 4: False Alarm Rate

Hazard Type	Total Tests	False Alarms	False Alarm Rate (%)
Flame	20	0	0.0
Gas	20	1	5.0
Temperature	20	1	5.0
Overall	**60**	**2**	**3.3**

The overall false alarm rate of 3.3%t indicated good system stability. Most false alarms were associated with environmental fluctuations affecting the gas and temperature sensors. The use of threshold validation and software filtering minimized unnecessary alerts.

3.5 Reliability Evaluation

The system reliability was computed as:

$$Reliability = \frac{Successful\ Operations}{Total\ Operations} X100 \quad (11)$$

Considering 98 successful operations out of 100 tests:

$$Reliability = \frac{98}{100} X100 = 98\%$$

The reliability recorded during the experimental trials shows that the system was able to maintain a consistent level of performance when the tests were repeated. This is important for a hazard monitoring system because its usefulness depends not only on detecting an incident once, but also on responding correctly whenever a similar condition occurs.

The performance of the developed system also compares well with related hazard detection and notification systems reported in previous studies. Dahalan *et al.* (2021), for example, developed at GSM-based system for detecting fire and gas leakage and sending SMS warnings. Similarly, Sowah *et al.* (2017) developed at multisensory fire detection system using Arduino, an MQ-2 sensor, flame and temperature sensors, together with GSM communication. These studies established that automatic detection combined with remote notification can provide a useful means of reporting hazards. The system developed in this study follows a similar principle but brings fire and gas detection, wireless reporting, visual and audible warnings, and GSM-based SMS notification together within one system.

Across the twenty experimental trials, the system recorded a meant total response time of 4.06 ± 0.07 s, with at 95% confidence interval of 4.03–4.10 s. The small variation in the recorded times suggests that the system responded consistently under the conditions in which it was tested. These figures should, however, be interpreted within the limits of the present experiment. A direct numerical comparison with earlier studies would not be appropriate because response times in those studies were not always measured or reported under comparable experimental conditions. The significance of the present result therefore lies mainly in the combination of the system's functions and the consistency of its measured response during repeated testing.

Communication through the GSM network was also generally dependable. An SMS delivery success rate of 98% was recorded during testing. One SMS transmission was unsuccessful because of network congestion, but the remaining messages reached their intended destination. This result shows that GSM-based SMS can provide a practical means of communicating hazard information remotely under normal cellular network conditions. It also means that a person responsible for responding to an incident does not necessarily have to be physically present at the monitored location before becoming aware of the hazard.

The system recorded a 3.3% false alarm rate, which was low under the conditions used for the experiment. The flame sensor detected the tested flame conditions without producing a false response, while minor false alarms were observed with the gas and temperature sensing sections. These were mainly associated with changes in the surrounding environmental conditions. The result suggests that the thresholds and filtering procedures used in the prototype were reasonably effective in separating normal variations from the hazardous conditions created during testing.

Another useful feature of the system is that the emergency information is communicated as an SMS rather than depending entirely on a person making a telephone call. During an actual emergency, a person may be under pressure, injured or unable to clearly explain what is happening. Automatically sending the detected hazard information reduces this dependence on verbal communication and shortens the reporting process. Considering its detection performance, low false alarm rate and SMS delivery reliability, the developed prototype provides a practical low-cost option for hazard monitoring in homes, offices, schools, laboratories, warehouses and light industrial environments.

4.0. Conclusion

This study designed, developed and experimentally evaluated a smart wireless hazard reporting system with automated SMS notification for enhanced emergency response. The system was developed around an Arduino Uno microcontroller and incorporated a flame sensor, MQ-2 gas/smoke sensor, DHT22 temperature sensor, GSM communication module, LCD and audible alarm. The intention was to develop a system that could monitor selected environmental conditions, recognize a possible hazard and communicate the information without waiting for someone to manually report the incident.

The experimental results showed that the prototype was able to detect the fire, gas and abnormal temperature conditions introduced during testing and provide the required warnings. Across the twenty trials, the mean detection time was 0.837 ± 0.016 s, while SMS delivery took an average of 3.226 ± 0.070 s. Together; these produced a mean total response time of 4.063 ± 0.073 s. The corresponding 95% confidence interval of 4.03–4.10 s shows that there was little variation in the total response time across the repeated trials.

In addition to its response time, the prototype achieved an overall detection accuracy of 96.7%, an SMS delivery success rate of 98%, and a false alarm rate of 3.3%. Taken together, these results showed that the system performed consistently under the conditions used for the experiment. Using more than one sensor also allowed different environmental conditions to be monitored rather than relying on a single sensing element for all hazard decisions.

The GSM communication section extended the usefulness of the system beyond the immediate location of the sensors. A local alarm can warn people who are nearby, but it may be of little help when a building or room is unattended. By sending an SMS automatically, the developed system provided a way of informing a designated person who may be elsewhere when the incident occurs. Since SMS communication does not require continuous internet access, the approach may also be useful in locations where internet connectivity is unavailable or unreliable.

The relatively simple architecture and use of readily available components also made the prototype suitable for further development as a low-cost hazard monitoring system. Potential areas of application include residential buildings, offices, schools, laboratories, warehouses and small industrial facilities where early awareness of fire, smoke, gas leakage or abnormal temperature conditions could help people respond before an incident becomes more serious.

Overall, the findings of this study showed that combining environmental sensors, local warning devices and GSM-based SMS communication can provide a practical approach to automated hazard reporting. Within the limits of the experimental conditions used in this work, the developed prototype demonstrated reliable detection and communication performance and provided a useful foundation for the development of more advanced emergency monitoring systems.

5.0 Recommendation

The findings of this study suggested that there are some improvements needed to enhance the functionality, reliability, and scalability of the proposed smart wireless hazard reporting system. Renewable energy sources must be included, particularly solar photovoltaic systems with battery backup to ensure continuous operation in the event of power outages. Future iterations should also include machine learning or artificial intelligence algorithms to enhance hazard classification, reduce false alarms, and allow the system to adapt to evolving environmental conditions. In addition, the use of carbon monoxide, LPG, methane, humidity and air quality sensors could extend the list of hazards that can be detected and improve environmental monitoring.

References

Akyildiz, I. F., Kak, A., and Nie, S. 2021. *6G and beyond: The future of wireless communications systems*. IEEE Access, 9, 133995–134030.

Al-Okby, M.F.R., Neubert, S., Roddelkopf, T and Thurow, K. 2021. Mobile Detection and Alarming Systems for Hazardous Gases and Volatile Chemicals in Laboratories and Industrial Locations. *Sensors* , *21*(23), 8128; https://doi.org/10.3390/s21238128

Asif, O., Hossain, M. B., Hasan, M., Rahman, M. T., and Chowdhury, M. E. H. 2014. *Fire-detectors review and design of an automated, quick responsive fire-alarm system based on SMS*. *International Journal of Communications, Network and System Sciences*, *7*(9), 386–395. https://doi.org/10.4236/ijcns.2014.79040

Bhattacharya, D., Ghosh, J. K., Boccardo, P., and Samadhiya, N. K. 2011. Wireless hazard communication system. *Journal of Systems and Information Technology*, *13*(4), 408–424. https://doi.org/10.1108/13287261111183997

Dahalan, W.M, Abdul Aziz , M.F., Rohaimi M.D., Samsol A.Z., Othman , A.G., and Azhar, O. (2021). The improvement of the system detect fire and gas leakage in workshop store using GSM module for send message alert. Marine frontier, Vol. 12, No. 2, pp. 88-95

Elechi, P., Orike, S., and Duru, C. G. 2022. *GSM-based integrated control system for optimal hazard management*. *Journal of Microelectronics and Solid State Devices*.

Esposito, M., Palma, L., Belli, A., Sabbatini, L., and Pierleoni, P. 2022. *Recent advances in Internet of Things solutions for early warning systems: A review*. *Sensors*, *22*(6), 2124. https://doi.org/10.3390/s22062124

Faseth, T.R., Baumann, P., Gruber, S.T., Hasler, A., Kosch, T., Lehning, M., Mendez, R., Vilella, D., Li, J.Y. and Badia, P. 2010. Wireless sensor networks for environmental monitoring: The sensor scope experience, proceedings of the IEEE, vol. 98, no. 11, pp. 1903-1917

Federal Emergency Management Agency. 2022. *National preparedness report*. https://www.fema.gov

GSMA. 2024. *The mobile economy 2024*. https://www.gsma.com

Hussian, S.A., Singh, K.P., Suryadevara, N.K., and Mukhopadhyay, S.C. 2013. Wireless sensor networks in healthcare: A survey. International journal of computer applications, vol. 62, no. 1, pp. 37-43

Jain, R., Xie, F., Wu, J. and Chen, J. 2011. Wireless sensor networks for intelligent transportation systems. IEEE transactions on intelligent transportation systems, vol. 12, no. 4, pp.1667-1676

Khan, M. A., Alsharif, M. H., and Kim, S. 2022. Internet of Things-based smart emergency response systems: A review. *Sensors*, *22*(5), 1834. https://doi.org/10.3390/s22051834

Lee, T.A., Chung, J.W. and Hong, S.H. 2010. Smart home energy management system using wireless sensor networks. IEEE transactions on consumer electronics, vol. 56, no. 3, pp. 1403 – 1410.

Misra, S., Woungang, I. and Misra, S.C. 2015. Industrial wireless sensor networks: Applications, protocols and standards. International journal of distributed sensor networks, vol. 11, no. 6, pp. 690583

Mohan, A., Subramanian, S., Manogaran, V., Venkatesh, G. and Kanniappan, G.K. 2020. Wireless sensor networks for agriculture: The state of the art in practice and future challenges. Computers and electronics in agriculture, vol. 174, pp. 105507

Monk, S. 2022. *Programming Arduino: Getting started with sketches* (3rd ed.). McGraw-Hill Education.

Odo, K.O., Abonyi, D.O. and Eke, J. 2024. Wireless sensor networks: A vital tool for improved agricultural practices in Nigeria. UNIZIK Journal of Engineering and Applied Sciences 3(5), December (2024), 1324 – 1334

Oluwaseun, O. T., Oloyede, O., Ojo, O. E., and Oyeniran, E. D. 2021. SEN-IoT: A smart emergency notification system suitable for developing countries using Internet of Things. *International Journal of Computer*, *39*(1), 36–50. https://doi.org/10.53896/ijc.v39i1.1682

Saravanan, K., Sanketh, M., Vasanth, S., Sai, P. M. S., and Vinod, K. 2022. Review on IoT-based fire alarm notification and extinguisher system. *Asian Journal for Convergence in Technology*, *8*(1), 36–42. https://doi.org/10.33130/AJCT.2022v08i01.006

Sowah, R. A., Ofoli, A. R., Krakani, S. N., and Fiawoo, S. Y. 2017. Hardware design and web-based communication modules of a real-time multisensor fire detection and notification system using fuzzy logic. IEEE Transactions on Industry Applications, 53(1), 559-566. Article 7575685. https://doi.org/10.1109/TIA.2016.2613075

United Nations Office for Disaster Risk Reduction. 2023. *Global assessment report on disaster risk reduction 2023*. https://www.undrr.org

Verdouw, C. N., Wolfert, J., Beulens, A. J. M., and Rialland, A. 2018. Internet of Things (IoT) in high-risk environment, health and safety industries: A comprehensive review. *Decision Support Systems*, *108*, 79–95. https://doi.org/10.1016/j.dss.2018.02.005