JOURNAL OF RESEARCH IN INDUSTRIAL TECHNOLOGY & EDUCATIONAL STUDIES (JRITES)
Homepage: http://Journals.unizik.edu.ng/index.php/jrites
e-ISSN 3122-0436
Vol 2 Issue 1 (2026) 74-83

Development and Implementation of Evaluation Rubric on Electronics Practical Skills in TVET Programme for Industrial Relevance

Fidelia Nwanneka Law-Obi[1*], K. R. E. Okoye[2],

[1]Department of Industrial and Technology Education,
Alvan Ikoku University of Education

[2]Department of Industrial Technology Education,
Nnamdi Azikiwe University Awka-Nigeria

Corresponding author

Abstract: The study determined the needed techniques on the development and implementation of evaluation rubrics on electronics practical skills in TVET programme for industrial relevance-construction and testing of single stage transistor amplifier circuit. The study answered three research questions and two hypotheses. Descriptive survey was adopted to carry out the research in Imo State. The population of study was 45 respondents, comprising of 26 Electronics Education Lecturers and 19 Electronics Engineering Technology Lecturers from high institutions in the State. There was no sampling due to smallness of the population, an intact population was used. A 23 – item questionnaire titled, 'Development and Implementation of Evaluation Rubrics on the, 'Construction and Testing of a Single Stage Transistor Amplifier Circuit'(DIER-AMP) was used for data collection; which was validated by three experts. The reliability of the instrument was 0.81 established using Cronbach Alpha. The questionnaire items were generated from the review of the related literature. Out of 45 questionnaires administered, 44 of them were returned. Mean and standard deviation were used to answer the research questions and null hypotheses were tested at 0.05 level of significance using Z-test. Mean of 3.50 or above was considered for the agreed items. Result of study revealed 5 agreed considerations, 8-items were the agreed process skills evaluation rubric; 8- items were the agreed product-skills evaluation rubric. Consequently, it was recommended that, electronic components, materials, tools and instruments should be provided in the workshop for learning practical skills and 50% of assessment in exam questions for each level in electronics should be based on practical. Collaboration should exist with experts from electronics industries in the teaching and evaluation of students to meet the expected standard among others.

Key words: Electronics, Electronics practical skills, Evaluation, Evaluation rubric and TVE

INTRODUCTION

Industries are established for the purpose of production of goods, research, maintenance, repair and services; in addition to assembling of parts through the efforts of workforce possessing different aspect of technical skills that match industrial standard. It is evident that skill shortage and mismatching with industrial standard has hindered economic growth in Nigeria. Labour market reports that Nigerian graduates do not possess the requisite skills due to poor implementation of curriculum. It has been observed that many graduates, who supposed to be absorbed in many industries are dropped or underemployed due to underperformance that emanates from the outcome of their preparations. The graduates' relevance depends on the off-shoot of classroom and workshop practical task performance.

Corresponding author: lawobifidelia@gmail.com

The set outcomes from teaching methodology, evaluation and assessment should be in line with industrial qualification standard. Suffice it to say that, employers depend on educators to provide job ready and training ready entering level employees. This is an indication that mode of lesson delivery, evaluation and assessment are core criteria in the development of a learner for employment with TVET curriculum (Garnevale, Gainer and Villet,1990). The industries in Nigeria are in the area of automobile, building, metalwork, woodwork, electrical technology and electronics among others.

Electronics deals with science and technology of the flow of electrons in semi- conductor devices. It is highly indispensable to develop a competitive modern economy and also to everyone in the universe, a household vocabulary that mirrors the reflection of telecommunication equipment/ gadgets such as television, audio and video machine, radio, camera, computer, amplifier, satellite, telephone, digital watches, mobile phone among others in human homes. Electronics can be classified into digital and analogue circuits. The electronic devices (circuits) of both digital and analogue are of benefit to humankind for they are capable of performing many functions such as; rectification, amplification control, generation, conversion, mixing, detection, clipping and multiplying. (Mehta and Mehta, 2019). In order to realize these values that accrue from electronics, it has been made a course of study. It is a technical vocational education and training course studied at Technical Colleges, Colleges of Education, Polytechnics and Universities. Electronics is a practical oriented course that enables a learner to obtain relevant experience for the development of a self-reliance; and a practically oriented education for vocational utilization and practices. The workforce needed in electronics industries are the products of technical vocational education and training (TVET) programme. TVET is an aspect of educational processes that comprises of general education, technologies and related science and acquisition of practical skills, attitude, understanding and knowledge relating to occupation and various sectors of economy and social life (2013). Electronics industries are associated with critical job or task in the area of hardware assembling and prototyping; testing and diagnostic tool proficiency; troubleshooting and maintenance; others are embedded system and programming; automation and power electronics and safety and documentation (Dieck-Assad, Avila-Ortega and Peria, 2021).Therefore, student of TVET programme are trained to be equipped with these electronics practical skills through the efforts of lecturers in polytechnics and electronics educators from colleges of education.

Practical skills in electronics involves putting the theory contents into real practical works. It is the hands-on abilities employed to build, test, trouble shoot, and repair electronic circuit and systems. The core practical works pins on the using of tools and instruments, selecting the proper tools and measuring instruments in construction of circuits and measurement; circuit assembling encompassing reading and interpreting circuit diagram, breadboarding, soldering components and connection of wires. (Ritenour, Yan and Jack, 2023). The practical skills in circuit testing involving testing for electronics component for identification, polarity, rating and continuity; others are verifying the circuit performance, power consumption, signal, frequency and basic calibration (Tokatlidis, Tselegkarids, Rapti, Sapounidis, Papakostas,2024). The practical skills in the area of troubleshooting and repairs entails the determination of open and short circuits, fault diagnosis, tracing of faulty components and their replacements (Guartocruz, 2025). The digital and embedded skills are not left out, which entails use of simulation software, simulating circuits (prototype), printed circuit board among others (Jaya, Haryoko and Suhaeb,2025). In addition to safety skills in terms of electrical safety protection from electrostatic discharge and proper handling of power electronic components

The planning of practical instruction entails setting objectives/outcomes for each lesson needed to be delivered. The specification of the performance objectives comes from the philosophy, goal and standard of performance obtainable in industries (Khasawneh, 2024). It indicates inclination to the professional practice; this means that the practical teaching/instruction revolves around the occupational practice of electronics. The model needful in the development of practical instruction is the four -step skill development model. It is very essential in the development of practical skills, consists of four phases. The four phases include familiarization, skill acquisition, practice skill and skill validation (Gagne, 1985; McNeill,2022). The instructor's last stage in teaching is the evaluation of the expected outcomes/objectives of the practical activities conducted.

Evaluation is the process of finding out the extent to which learning experiences developed and organized are actually producing the desired results. It is the process of evaluation which involves

identifying the strengths and weaknesses of the lesson taught or to check the effectives of a particular instrument (Khasawneh, 2024). Evaluation rubric is a set of clear criteria used to judge or score work. In the development of quality evaluation rubrics on practical skills in electronics, consideration should be given to a qualitative and procedural knowledge and relating the questioning technique to real world skills in industry (Dieck-Assad, Avila-Ortega and Peria, 2021). According to Goodhew (2010), planning for the practical skill assessment involves considering: expected set-outcome or objectives, whether the evaluation should fall within formative or summative, differentiative students' performance using checklist or rating scale to assess the laboratory practical skills. In the same vein, in the development of course of study, set objectives, learning activities, resource materials including procedure and instrument for evaluation and its format are taken into consideration (Law-Obi, 2024). This is followed by the arrangement of instruction or evaluation materials; which are equipment, tools and materials such as electronic components, power supplies, and as well as operating measuring instruments-voltmeters, multimeter, oscilloscope and digital probes. According to, Kamila, Marlia and Salivan (2012), the evaluation of practical skills involves the assessment of practical foundation of the learner that revolves around in-depth utilisation of electrical measuring instruments, tools, electronic components and materials in circuits construction. In the evaluation of the construction of single stage transistor amplifier circuit, one can set expected outcome such as: 1) construction of the circuit using prototype board (breadboard). 2) Construction of circuit on permanent board (Veroboard). 3) Testing the circuit to find out the correct mechanism and output. The materials provided are multimeter, soldering iron, solder, oscilloscope, wire. transistor, capacitors, resistors, breadboard, and Veroboard among others. The amplifier circuit is chosen as an example because it is mostly needed in many other circuits for increase in signals (voltage or current) gain depending on the number of stages and type of coupling used. However, studies have shown that the availability of effective instructional / evaluation materials significantly impact students' performance in practical subjects (Reigelith,2021).

Effective development of evaluation rubrics involves both process and product assessment; process evaluation entails the extent learners are able to carry out practical skills procedures. Edexcel (2010) and Tooley (2006) electronic practical process assessment is to be based on: Finding out whether learners are able to identify potential hazard and observes safe working practices in the Electronic Workshop. In addition to the function of electronic components, usage in a circuit diagrams and construction of electronic circuit using safe working procedures. Electronic practical skills indicate measurement skills, it is an observable process whereby students are observed in using laboratory instruments to measure the electric quantities of a circuit, selection of appropriate tools, adjusting it to specific measurement and applying it to the suitable points of the circuit (Cuartocruz, 2025). In the view Ikabal and Hasanah (2022) stated that process skills are observed in electronics and is a core investigative area for student, such as measurement skill. The process assessment is not left out in the area of circuit constructional stages, component selection and usage in circuit building, soldering techniques. breadboarding and troubleshooting on the newly constructed and faulty circuits (Enoche, 2025). It has been highlighted that student's performance are evaluated by observation as they troubleshoot and work with real and virtual components in remote environment and their interaction captured through software (Antonio-Torres etal, 2021).

Product evaluation indicate assessment of the finished product. In product evaluation, important features are checked upon especially where students are being examine in circuit construction. Collis (2012) in agreement with Schuler (2010) highlighted that finish product of electronic constructed project is normally examined based on the state of: solder, dull or shiny, the shape of finished soldering joints, routing rack, air wire and stress on wires, cleanliness and lastly specification. All finished products are assessed based on electronics principles and theories and law; code of practice in industries recognized in the construction of the circuits (Law-Obi and Ogbuanya,2017). The process and product evaluations are validated using checklist or rating as the key assessment tools depending on the activities rated. The rating scale or checklist is essentially useful because it provides a common scale for assessing the performance of all learners alike. It creates a process for eliminating subjectivity and increasing fairness in evaluation. Generally, process evaluation involves observation of students' performance attentively and consistently as the work is going on and rating instantly, while product

evaluation is based on the objective judgement of the quality of the finished product and workability of the circuit (Law-Obi and Ogbuanya,2017, Ikabal and Hassanah, 2022).

Presently, employers are in dire need of TVET electronics graduates, who are technically competent, possessing practical skills aligning with the job specific skills in line with industrial standard. It is important to note that employers of labour depend on educators to feed the industries with job ready and training ready employees. Effective evaluation ensures that graduates produced in our TVET institutions are equipped with necessary hands-on competency in different area of electronics work; that is having proficiency in using measuring instruments for trouble shooting, maintenance, servicing, repairing, assembling of part of parts and circuit construction among others. It is believed that many teachers are inexperience in practical skills work evaluation; for it has been observed that theoretical pen and pencil tests (cognitive domain tests) are the most common evaluation-based assessment in our TVET institutions. This existing gap created window portraying that academic skill training and industrial skill requirements are parallel to each other in practice, often leading to unemployment of our graduates. Against this backdrop this paper seeks to develop and implement evaluation rubrics on electronics practical skills in TVET education for industrial relevance.

In the development and implementation of evaluation rubrics on electronics practical skills emphasis was based on the single stage transistor amplifier circuit as shown below.

Single Stage Transistor Amplifier Circuit

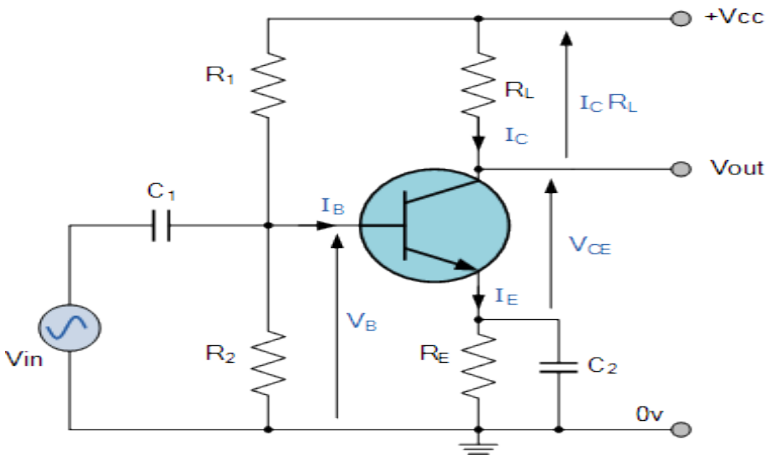

Purpose of the Study

The main purpose of this study was to develop and implement evaluation rubric on electronics practical skills in TVET programme for industrial relevance. Specifically, the study sought to: determine the development and implementation of evaluation rubrics on the, 'construction and testing of a single stage transistor amplifier circuit'

1. Identify the needed considerations in the development and implementation of evaluation rubric on electronics practical skills in TVET programme for industrial relevance based on the, 'construction and testing of a single stage transistor amplifier circuit'

2.Determine the development and implementation of process skills evaluation rubric on electronics practical skills in TVET programme for industrial relevance based on the, 'construction and testing of a single stage transistor amplifier circuit'

3. Determine the development and implementation of product skills evaluation rubric on

rubric on electronics practical skills in TVET programme for industrial relevance based on the, 'construction and testing of a single stage transistor amplifier circuit'

Research Questions

The following research questions guided the study

RQ1: What are to be considered in the development and implementation of evaluation rubric for the, 'construction and testing of a single stage transistor amplifier circuit'

RQ2: What are to be determined in the development and implementation of process skills evaluation rubric on the, 'construction and testing of a single stage transistor amplifier circuit'.

RQ: What are to be determined in the development and implementation of product skills evaluation rubric on the, 'construction and testing of a single stage transistor amplifier circuit'

Hypothesis

Two null hypotheses were tested at 0.05 level of significance

H_O1: There is no significance difference on the mean rating of Electronics Engineering Technology Lecturers from Polytechnics and Electronics Educators on the process skills evaluation rubric for the, 'construction and testing of a single stage transistor amplifier circuit'.

H_O2: There is no significance difference on the mean rating of Electronics Engineering Technology Lecturers from Polytechnics and Electronics Educators on the product skills evaluation rubrics for the, 'construction and testing of a single stage transistor amplifier circuit'

METHOD

The study determined the techniques needed in the development and Implementation of the evaluation rubric on the, 'construction and testing of a single stage transistor amplifier circuit'. Descriptive survey reach was adopted for the study. The population of study was 45 respondents, comprising of 26 Electronics Education Lecturers and 19 Electronics Engineering Technology Lecturers from high institutions in Imo State. There was no sampling due to smallness of the population, an intact population was used. A 23 – item questionnaire titled, 'development and implementation of evaluation rubrics on the, 'construction and testing of a single stage transistor amplifier circuit' (DIER-AMP) was used for data collection; which was validated by three experts. The reliability of the instrument was 0.81 established using Cronbach Alpha. The questionnaire items were generated from the review of the related literature; which consisted of four sections, A to D. Section A, solicited for information on correspondence personal data. Section B, assesses considerations for the development; Section C was based on process skills evaluation rubric; Section D was based on product-skills evaluation rubric. The instrument made use of 5 points Likert scale = Strongly Agree (SA), Agree (A), Undecided (U), Disagree (D) and Strongly Disagree (SD). The response categories values were assigned 5,4,3,2, and 1 respectively. The instrument was validated by three experts from Electronics Technical Educators and Electronics Engineering Technology lecturers; mean and standard deviation were used to answer the research questions while Z- test was used to answer the hypotheses and any item with a mean of 3.50 or above was considered agreed. The hypothesis was tested at 0.05 level of significance.

RESULTS

Considerations in the development and implementation of evaluation rubric for the, 'construction and testing of a single stage transistor amplifier circuit'

Table 1: Mean ratings on the considerations in the development and implementation of evaluation rubric for construction and testing

S/N	Ability to consider the:	□ □	SD	Remark
1.	Expected outcome	4.78	0.87	Agree
2.	Summative or Formative	4.80	0.85	Agree
3.	Industrial standard	4.69	0.86	Agree
4.	Checklist or Rating Scale	4.57	0.88	Agree
5.	Equipment, Tools and Materials	4.81	0.89	Agree
	Grand Mean	**23.56**		
	Average Mean	**4.71**		**Agree**

The data presented in table 1, revealed that 5 items had mean range from 4.57 to 4.81 above the minimum cut off point of 3.50. these items are the agreed considerations on the development and implementation of evaluation rubric for the, 'construction and testing of a single stage transistor amplifier circuit'

Development and implementation of process skills evaluation rubric for the, 'construction and testing of a single stage transistor amplifier circuit'

Table 2: Mean rating on the development and implementation of process skills evaluation rubric for construction and testing

S/N	Item: Ability to:	□ □	SD	Remark
1.	Follow safe working practices	4.87	0.82	Agree
2.	Selection and placement of components based on the position in the circuits /function	4.65	0.86	Agree
3.	Follow Professional industrial standard	4.29	0.68	Agree
4.	Measuring skills and application to suitable points in the circuit- Vin, operating, voltage	4.48	0.88	Agree
5.	Follow Constructional stages	4.45	0.76	Agree
6.	Apply soldering techniques	4.67	0.77	Agree
7.	Apply skills in breadboarding	4.46	0.67	Agree
8.	Troubleshooting the new built circuit.	4.55	0.69	Agree
	Grand Mean	**36.42**		
	Average Mean	**4.55**		**Agree**

The data presented in table 2, revealed that 8 items had mean range from 4.29 to 4.87 above the minimum cut off point 3.50. these items are the agreed process skills evaluation rubric for the, 'construction and testing of a single stage transistor amplifier circuit'

Development and implementation of product skills evaluation rubrics for the, 'construction and testing of a single stage transistor amplifier circuit'

Table 3: Mean rating on the development and implementation of product skills evaluation rubrics for construction and testing

S/N	Item: Ability to:	□ □	SD	Remark
1.	Achieve bright and shiny soldered area	4.55	0.67	Agree
2.	Achieve cone and shiny finished soldered joint	4.64	0.77	Agree
3.	Connect air wire network that form schematic tightly	4.65	0.63	Agree
4.	Achieve connection of air wire stress free	4.43	0.64	Agree
5.	Assess the product based on electronic principles, theories and law.	4.41	0.76	Agree
6.	Achieve cleanliness and correct specification.	4.50	0.60	Agree
7.	Achieve correct routing track	3.25	0.72	Disagree
8.	Connect according to code of practice in industries.	3.98	0.67	Agree

9.	Achieve quality and excellent performance of the circuit by realizing signal amplification	4.78	0.66	Agree
10.	Connect according to code of practice in industries.	3.23	0.68	Disagree
	Grand Mean	**42.42**		
	Average Mean	**4.24**		**Agree**

The data presented in table 3, revealed that 10 items had mean range from 3.23 to 4.78., 8 of the above items have the minimum cut off point of 3.50. these items are the agreed product skills evaluation rubric for the, 'construction and testing of a single stage transistor amplifier circuit

Z- test of the Difference Between the Mean Response of Electronics Educators in Colleges of Education and Electronics Technology Lecturers from Polytechnics on the development and implementation of process skills evaluation rubric for the, 'construction and testing of a single stage transistor amplifier circuit'

Table 4: Z- test on the development and implementation of process skills evaluation rubric for construction and testing

S/N	Technical Staff	Mean	Standard Deviation	N	Df	Standard Error	Level	Z-cal	Z-crit
1.	Electronics Educators	4.23	0.861	26	128	0.70	0.05	0.514	196
2.	Electronics Tech. Lecturers	4.28	0.855	18					

The z-test analysis summarised in table 4 revealed that there is no significant difference between the mean rating of Electronics Educators and Electronics Technology lecturers on the development and implementation of process skill evaluation rubric for the, 'construction and testing of a single stage transistor amplifier circuit' It tested at 0.05 z-level and degree of freedom, 128.The calculated z-value is 0.514 less than the critical z-value, 196.This has led to decision that the null hypothesis should be accepted.

Z- test of the Difference Between the Mean Response of Electronics Educators in Colleges and Electronics Technology Lecturers from Polytechnics on the development and implementation of product skill evaluation rubrics for the, 'construction and testing of a single stage transistor amplifier circuit'

Table 5: Z- test on the development and implementation of product skill evaluation rubrics for construction and testing

S/N	Technical Staff	Mean	Standard Deviation	N	Df	Standard Error	Level	Z-cal	Z-crit
1.	Electronics Educators	4.23	0.861	26	128	0.70	0.05	0.514	196
2.	Electronics Tech. Lecturers	4.28	0.855	18					

The z-test analysis summarized in table 5 revealed that there is no significant difference between the mean rating of Educators and Electronics technology lecturers on the development and

implementation of product skills evaluation rubrics for the, 'construction and testing of a single stage transistor amplifier circuit'. It tested at 0.05 z-level and degree of freedom, 128.The calculated z-value is 0.512 less than the critical z-value, 196.This has led to decision that the null hypothesis should be accepted

DISCUSSION

It was found out from the first research questions that 5 items in table 1 were the agreed consideration for the development and implementation of evaluation rubric on practical electronics. The findings affirmed that, planning for the practical skill assessment involves considering: expected set-outcome or objectives, whether the evaluation should fall within formative or summative, differentiative students' performance using checklist or rating scale to assess the laboratory practical skills (Goodhew, 2010), In the same vein, in the development of course of study, set objectives, equipment, tools material, procedure and instrument for evaluation and its format are taken into consideration(Law-Obi, 2024) The research findings in table 2 indicated that all the items are the process skills evaluation rubric for electronics practical based on the construction and testing of a single stage transistor amplifier circuit.

The findings are in agreement with electronic practical skills stating that students are observed while measuring electric quantities (current, voltage and resistance) of a circuit, selection of appropriate tools, adjusting it to specific measurement and applying it to the suitable points of the circuit (Cuartocruz, 2025; Ikabal and Hasanah 2022). In the same vein students are observed in measurement skill, in avoiding potential hazard and safe working practices as they interact with equipment, tools, measuring instrument and electronic components in electronics workshop (Edexcel,2010; Tooley,2006) The findings also align with circuit constructional stages, component selection and usage in circuit building, soldering techniques. breadboarding and troubleshooting on the newly constructed and faulty circuits as the observable process skills (Enoche, 2025). One of the findings indicated industrial standard affirmed that, the development of quality evaluation rubrics on practical skills in electronics, consideration should be given to a qualitative and procedural knowledge and relating the questioning technique to real world skills in industry (Dieck-Assad, Avila-Ortega and Peria, 2021).

The research findings in table 3, affirmed 8 items as the product skills evaluation rubric for electronics practical skills. Collis (2012) in agreement with Schuler (2010) highlighted that finish product of electronics constructed project is normally examined based on the state of: solder, dull or shiny, the shape of finished soldering joints, routing rack, air wire and stress on wires, cleanliness and lastly specification. All finished products are assessed based on electronics principles and theories and law; code of practice in industries recognized in the construction of the circuits (Law-Obi and Ogbuanya,2017). The findings indicated that two of the items based on track routing were not agreed upon because of being rated below 3.50. since the set objectives were not based on producing printed circuit. Therefore, should not be assessed likewise.

There is no significant difference established indicated that electronics technology educators and electronics technology lecturers understand the contents areas in the development and implementation of evaluation rubric on practical electronics skills on then construction of single stage transistor amplifier circuit for industrial relevance.

CONCLUSION

The findings of study revealed that in the development and implementation of evaluation rubric on electronics practical skills proper consideration such as expected outcome is a key coupled with industrial standard; equipment tools and materials. The Process skills evaluation undertaken following proper stages using prototype (breadboard), measuring skills and standard constructional techniques. In the product skill evaluation, judgement should be based on the expert soldering skills, quality and excellent performance of the circuit. The practical skills established is needed to be put into practice in the workshop or laboratory. The evaluation rubrics developed and implemented are quite applicable to every other electronic circuits to some extent, for all the circuits in electronics are not performing the same functions. This is the reason of narrowing this paper to single stage transistor amplifier circuit.

RECOMMENDATIONS

Based on the research conducted the following recommendations are made:

1. Electronic components, materials, tools and instruments should be provided in the workshop for learning practical skills 50% of assessment in exam questions for each level in electronics should be based on practical.
2. There should be collaboration with experts from electronics industries in the teaching and evaluation of students to meet the expected standard among others.
3. The rapid technology advancement in this field suggest that educational TVET institutions must continuously update their curriculum together with their evaluation standard in both formative and summative to align with industrial qualification standard in electronics practice. This alignment provides students with robust platform for the development of industrial real-life skill.
4. Rating scale or checklist should be used in student assessment of practical skills.
5. The replica of workshop electronic equipment, tools, components and other infrastructure utilised in electronics industries should be also use in our TVET institutions in training and evaluation.

REFERENCES

Antonio-Torres,D., Medina -Pozos, J.M. Agula- Mejia, J. R., Zamorahernandezi, I., Torres- Rios, E., Moreno-Moreno, J. (2021). Assessment of electronic laboratory competencies using virtual observation, *Proceedings of International Conference on Education 7(1),* 174-188 https://doi.org/10.17501/24246700.2021.7117

Collis B. (2012). *An introduction to practical electronics, micro controllers and software design (2nd edn.).* www.techideas.co.nz.

Diecl-Assad G., Avila-ortega A. & Peria, O.I.G (2021). Comparing competency assessment in electronic engineering education with or without industrial training partner by challenge- based earning oriented to sustainable development goal. http://doi.org/10.3390/84131910721

Edexcel (2010). *BTEC level 2 first engineering specification*. USA: Author

Enoche, K. S. (2025). Assessment of students' Practical skills performance on electrical installation and maintenance works in technical colleges in River State. International Journal of Innovative Scientific and Engineering Technologies Research 13(1), 136-146. https://.www.seahipublications.org. ISSN2360-896x doi:10.5281/zenodo.14984999.

Federal Republic of Nigeria (2013). *National policy in education* 6th ed. Lagos: NERDC

Gagne, R. M. (1985). *The conditions of learning and the theory of instruction 4th ed,* Holt, Rinehart and Winston.

Goodhew, P. J. (2010). Teaching Engineering http://www.icbi.hw.ac.uk/reset/ index/html

Guartocruz, A. T. (2025). Evaluating trouble shooting skills of electronics technology student for industry relevance. ISSN101316; CODEN: SITE8. https://www.researchgate.net

Ikabal, M.S., Hasannah, A.U. (2022). Science skills analysis of students' in basic electronics Practice. *Journal of Teaching and Learning Physics 7(2),* 118-125 https://doi.org/10.15575//jotalpv712.1687

Jaya,H.L., Haryoko S, Suhaeb, S.(2025). Project based and remote electronic laboratory research. *Journal of Educational Science and Technology.* http://doi.org/10.26858/est.v6.r.12006

Kamila, R. S., Marlia, P. & Saliwani, M. D. (2012). Assessing students' practical skills in basic electronic laboratory based on psychomotor domain model, Malaysia 1877_0428 Elsevier.

Khasawneh, M.A.S. (2024). The challenges facing vocational education online from the teachers' perspective. *Journal of Curriculum and Teaching13*(2). ISO. https//doi.org/10.5430/jet. v13n2p180

Law-Obi, F. N. & Ogbuanya, T.C. (2017). Teaching strategies needed for enhancing creativity in TVET for industrialization in Imo State, Nigeria. *International Journal of Social Science and Humanities Research 5*(3), 147-149. www. research publishes.com.

Law-Obi, F.N. (2024). Development of employability skills as a course of study in TVE curriculum in Nigerian educational system for sustainable workforce. *Journal of association of vocational and technical educators of Nigeria 29(3) 119-127*

McNeill, L. (2022). *Microlearning through the lens of Gagne's nine events of instruction.* Tech Trends. https://pmc.ncbi.nih.gov/articles/PMC9631595/

Mehta, V.K.& Mehta R. (2019). *Principle of Electronics,* India: Chand

Orlich D. C., Harder R. J. Callahan R. C. and Cybson, H. W. (2001). *Teaching Strategies a guide to better instruction*. New York: Houghton Mifflin

Reigelith, C. M. (2021). *Instructional -design theories and models: A new paradigm of instructional theory*: Routhledge.

Ritenour, A., Yau, Y., & Jack, H. (2023). Use of individual lab kits to enhance hands-on learning in electronics circuits course. Paper presented at the ASEE Annual conference and Exposition. https://peer.asee.org/use-of-individual-lab-kits-to-enhance-hands -on leaning outside and inside classroom.

Schuler C. A. (1999). *Electronics principles and application* (5th edn.) New York: Mchraw-Hill.

Tokatlidis, C. etal. (2024). Hands- on and virtual laboratories in electronics circuits learning-knowledge and skills acquisition. *Journal of Information15*(11),672 https: // doi.org/10.3390/info15110672

Tooley, M. (2006). *BTEC first circuit fundamental and application.* USA: Newness.