Journal of Innovative Research in Engineering and Science 2 (1), March, 2011.
ISSN : 2141-8225
© Global Research Publishing, 2011.

A Factorial Study of Accessibility Requirements for Paraplegics Mobility in Built Up Environment *(pp. 29-43)*

Ashiedu, Festus and Igboanugo, Anthony Clement
Department of Production Engineering,
University of Benin,
Benin City.

Abstract: This paper examines various variables that hinder or facilitate paraplegics accessibility to public buildings in Nigeria, especially storey buildings, up to the point of service delivery. To address this problem, this study introduced a survey approach, incorporating the method of Rensis Likert's attitudinal scale, to generate respondents' data matrix that was analysed with Principal Component Analysis (PCA) using statistiXL software. Spectacularly, our model clustered the gamut of variables, each weilding significant loading on a factor, into nine distinct factors which were creatively labeled: accessibility enhancers, inclusive design legislation, mobility difficulties, utility of mobility aids, user-friendliness of systems, utility of monocoque, social welfarism, helpfulness of inclusive design and, person centricity design. Furthermore, our findings provide support for the notion that the proposed monocoque is an imperative. The paper concludes by suggesting that the outcome of this research is needful and helpful to Town Planners, Architects, Human Factors Engineers (Ergonomists), Civil Engineers, Social Workers and, especially the Council for the Regulation of Engineering in Nigeria (COREN), in our society's effort to whittle down the perceived mobility challenges of the paraplegics in Nigeria.

Key words: paraplegics, monocoque, ramps, built-up environment, caregivers, surrogate-variables.

1 INTRODUCTION

The design of public sidewalks and buildings in Nigeria appears to have been made without due consideration to the demands of the disabled, especially those with lower limb deformity (paraplegics). This apparent oversight and lapse in judgement on the part of Government has made it quite difficult for paraplegics in Nigeria to access public buildings upto the point of service provision such as acquiring education in public schools, seeking health care in public hospitals, play or watch games in stadia, moving in streets without the assistance of caregivers. The problem posed by the seeming negligence adversely affect

mobility of about 23 persons per 1000 population in major cities in Nigeria including the Federal Capital Territory (Abuja) which has the least population of disabled (Odufuwa, 2007). Evidently, the population of paraplegics in Nigeria is statistically significant that due attention need be given to their plight by adopting inclusive design in built-up environment.

A review of literature demonstrates that many authors have used qualitative methods, percentage distribution, correlation and regression statistical techniques, see, for example, Hamza and Dada (2005) as well as (Odufuwa, 2007). The proposed approach, besides presenting model inclusive designs that meet all kinds of users requirements for both public sidewalks and buildings, identified the key factors that hinder or enhance mobility of paraplegics. The factors were subsequently transformed into metric variables to facilitate mathematical tractability. The approach further employed PCA to summarize or reduce the large number of scale items (variables) affecting paraplegics into fewer dimensions (factors, F_j : j = 1, 2, …,9) to achieve parsimony. The factors were creatively labeled, interpreted and used as decision support tools for policy development.

Odufuwa (2007) thereof noted that it is unconscionable that despite the high rate of population of disabled persons in Nigerian cities, the government and citizens offer little or no promise to this less privileged group, stressing that it is becoming increasingly difficult for the disabled in Nigeria to have a sustainable livelihood. He attributed the hardship, to a large extent, to their inability to have access to basic facilities.

Although the literature about the welfare of paraplegics in Nigeria is deficient, elsewhere numerous authors have documented assistive technology for user group that includes disabled and older people. It is generally believed that accessibility is a key transportation element and is a direct expression of mobility either in terms of people, freight or information (Rodrique, 2004). Moreover, a number of studies (Focas, 2000; Huby and Burkitt, 2000; Shucksmith, 2000 and Trac, 2000) argued that inability to access transport can lead to people missing out jobs, education and other social opportunities.

Also, various studies had examined users' perception of wheel chair styling, design features and their appeal. Some of the relevant studies include: Thomas (2001), Newell (2003), Pockney (2003), Bennington et al (2003), Keates and Clarkson (2002), Gheerawo and Cassim (2003), Pockney (2003), Porter (2003), Browning et al (1996), Close (2001), Cassim (2003a, 2003b), Allen (2004), Field (2003), Pockney (1999), Barber (1996), Warwick and Cavallaro in Kennington edition (1998).

The aim of this study therefore is to provide design guidelines for inclusive designs in sidewalks and hallways leading to public buildings. The study also aims at using the PCA

statistical technique to abstract, from a gamut of factors, the surrogate variables that would be helpful in carrying out concurrent (simultaneous) engineering design in the course of development of ramps, hallways, mobility aids in order to achieve paraplegic centricity. Perhaps in no other modeling endeavour is the use of PCA seen more than in data reduction and summary which is most helpful in policy development. To achieve such result is beyond the scope of unsophisticated techniques.

2 METHOD OF STUDY

This research was carried out in Nigeria, a West African Country having a population of about 140 million with an associated annual growth rate of 2.8% spanning over 350 ethnic groups (NPC, 2006 and Pyke et al, 2003). The target for this study is the Paraplegics in Nigerian cities. For the survey aspect of the study, Edo state was used as a purposive sample. The state is located at the transit nerve centre of the nation and that is exactly why it is referred to as the 'heart beat of the nation'. Many ethnic nationalities reside there including foreigners. A random sample of 10 paraplegics and forty persons from academia were administered with questionnaires crafted with twenty one (21) scale items (variables) describing attributes relating to fitting job to paraplegics (FJP) in sharp contrast to the present Procrustean approach of fitting paraplegics to job (FPJ). The scale items are detailed in Table 1. The target respondents were briefed and debriefed before and after the administration of the instruments respectively to assess content validity.

Table 1: Twenty-one Scale Items (Variables) on Accessibility and Mobility of Paraplegics

Item No	Scale Item	Item No	Scale Item	Item No	Scale Item
1	Usefulness of monocoque	8	Unavailability of ramps	15	Alternative power supply cost
2	Usefulness of built environment	9	Utility of electric wheelchair	16	Effectiveness of ramp-handrails
3	Utility of monocoques	10	Panacea to paraplegic challenges	17	Accessibility restrictions impacts
4	Consequences of mobility limitations	11	Standard ramp design	18	Accessibility of built-up-environment
5	Usefulness of assistive technology	12	Usefulness of anthropometric data	19	Government lip-service
6	Importance of inclusive design	13	Wheelchairs user-unfriendliness	20	Difficulties in hand rim propulsion
7	Effective legislation towards inclusive design	14	Dearth of ramps	21	Power failure induced inoperability

The questionnaire was scaled with 7–point Rensis Likert's attitudinal scale which enabled respondents' response options to be transformed into metric variables that measure the degree of possession of attributes. These were subsequently collated as data matrix which served as input to the PCA that followed. StatistiXL software was used to generate correlation matrix, factor matrix, parameter estimates. Surrogate variables were highlighted from the factor matrix which yielded 9 factors. The unrotated factor space earlier obtained could not lend itself to easy interpretation and so varimax rotation became expedient. We did this because we already know that we are at liberty to make any linear transformation of the factor space without affecting the fit of the model. Thus, since the factor solutions are orthogonal, the factors are independent. Factor loadings in the factor matrix showing remarkable departure from 0.500 were disregarded. Moreover, latent root criterion was applied. It requires that any individual factor account for the variance of at least a single variable if it is to be retained for interpretation

It is important to observe that factorability of the correlation matrix was examined by visual inspection of the correlation matrix. It revealed substantial number of correlations greater than 0.30 thus suggesting that the PCA is applicable.

The following assumptions about Factor Analysis were made:

a) normality (shape of data distribution for individual metric variable)
b) homoscedasiticity (equal dispersion of variance across variables), and
c) linearity (columns of data matrix are seen as column vectors with linear characteristics), which can diminish correlation.

Finally, the model design of hallways and ramps were carried out by making reference to Human Factors Design Handbook (Woodson, Tillman and Tillman,)

3 RESULT AND DISCUSSION

Table 2 shows the unrotated factor solution space. Nine orthogonal factors were extracted. By examining the unrotated factor matrix we note the need for a factor matrix rotation.

Factor loading in the factor matrix that is considered as middling (neighbourhood of 0.500), substantial (neighbourhood of 0.700) and meritorious (neighbourhood of 0.900) were highlighted, retained and interpreted. Table 4 shows the eigenvalue.

Table 2: Unrotated Factor Loadings

Variable No	Factor 1	Factor 2	Factor 3	Factor 4	Factor 5	Factor 6	Factor 7	Factor 8	Factor 9	Communalities
1	0.273	-0.143	0.213	-0.159	0.478	-0.135	-0.611	-0.156	-0.298	0.898
2	0.208	-0.225	-0.202	0.018	-0.192	0.724	0.058	-0.111	0.444	0.909
3	0.566	0.019	-0.145	0.400	-0.230	0.333	0.233	0.209	-0.348	0.886
4	0.454	-0.366	-0.360	0.146	0.305	0.109	-0.243	-0.035	0.382	0.803
5	-0.177	0.260	0.586	-0.502	-0.250	0.149	0.212	-0.032	0.261	0.893
6	-0.212	-0.069	0.332	-0.479	0.028	0.206	-0.342	0.513	0.086	0.821
7	0.620	-0.421	0.201	0.045	0.294	0.432	-0.164	-0.002	-0.043	0.905
8	0.481	0.112	0.304	0.576	0.101	-0.098	-0.180	0.379	0.136	0.882
9	0.369	0.357	0.597	0.184	-0.036	-0.226	-0.053	-0.296	0.174	0.827
10	-0.252	-0.422	0.669	-0.006	-0.133	0.371	0.047	-0.221	-0.243	0.955
11	0.493	0.532	0.108	-0.465	0.034	0.167	-0.098	-0.263	-0.062	0.866
12	0.382	0.142	0.550	0.169	0.201	0.209	0.368	0.007	-0.219	0.764
13	0.463	-0.280	0.376	-0.159	-0.316	-0.297	-0.234	0.157	0.269	0.799
14	0.059	0.304	0.220	0.107	0.660	-0.207	0.396	-0.044	0.255	0.858
15	0.608	0.571	-0.125	-0.060	-0.250	0.037	-0.018	0.179	-0.150	0.833
16	-0.008	-0.384	0.125	-0.289	0.256	-0.087	0.360	0.637	-0.039	0.858
17	0.514	-0.164	-0.333	-0.621	0.165	-0.105	0.121	-0.058	-0.211	0.888
18	0.349	-0.675	0.173	0.093	-0.105	-0.384	0.288	-0.157	0.067	0.886
19	-0.051	0.738	-0.146	-0.081	0.511	0.226	0.075	0.079	0.126	0.914
20	0.433	-0.457	-0.203	-0.357	0.155	-0.047	0.325	-0.181	0.062	0.734
21	0.669	0.362	-0.151	-0.172	-0.462	-0.211	0.036	0.088	0.063	0.902

Accordingly, Table 3 depicts the varimax rotated factor loadings.

Table 3:Varimax Rotated Factor Loadings

Variable No	**Factor 1**	**Factor 2**	**Factor 3**	**Factor 4**	**Factor 5**	**Factor 6**	**Factor 7**	**Factor 8**	**Factor 9**	**Communalities**
1	-0.049	0.062	-0.091	0.092	-0.043	-0.934	0.028	-0.005	-0.008	0.898
2	-0.012	-0.876	-0.075	-0.119	0.059	0.249	-0.200	-0.082	-0.104	0.909
3	0.387	-0.181	0.018	0.352	-0.017	0.183	-0.206	-0.024	-0.708	0.886
4	0.051	-0.673	-0.137	0.449	-0.167	-0.244	0.142	0.008	0.136	0.803
5	0.051	0.056	0.028	-0.918	0.004	0.148	0.095	0.114	0.019	0.893
6	-0.048	-0.061	0.170	-0.430	0.117	-0.279	-0.209	0.661	0.169	0.821
7	-0.015	-0.576	-0.149	0.081	-0.190	-0.495	0.004	0.128	-0.497	0.905

8	0.327	-0.146	0.582	0.278	-0.261	-0.203	0.317	0.136	-0.332	0.882
9	0.297	0.081	0.309	-0.347	-0.291	-0.244	0.435	-0.381	-0.194	0.827
10	-0.591	0.000	0.085	-0.499	-0.226	-0.128	-0.284	-0.031	-0.448	0.955
11	0.576	-0.069	-0.279	-0.419	0.283	-0.343	0.114	-0.226	-0.116	0.866
12	0.066	0.032	0.029	-0.213	-0.042	-0.093	0.353	0.013	-0.760	0.764
13	0.345	-0.135	0.099	-0.220	-0.708	-0.242	-0.040	0.191	0.080	0.799
14	-0.079	0.083	-0.035	-0.015	0.132	-0.002	0.904	0.027	-0.092	0.858
15	0.861	0.022	0.007	0.013	0.174	-0.018	-0.029	-0.060	-0.238	0.833
16	-0.143	0.084	-0.248	0.024	-0.168	0.100	0.147	0.831	-0.132	0.858
17	0.339	-0.037	-0.827	0.080	-0.044	-0.235	-0.031	0.156	0.010	0.888
18	-0.135	-0.038	-0.292	0.131	-0.853	0.043	0.104	-0.019	-0.152	0.886
19	0.206	-0.036	0.043	-0.053	0.786	-0.022	0.496	0.021	0.037	0.914
20	0.022	-0.263	-0.733	0.076	-0.316	-0.017	0.112	0.072	-0.058	0.734
21	0.909	-0.009	-0.117	-0.042	-0.197	0.097	-0.045	-0.100	-0.014	0.902

Table 4:Explained Variance (Eigenvalues)

Value	Factor 1	Factor 2	Factor 3	Factor 4	Factor 5	Factor 6	Factor 7	Factor 8	Factor 9
Eigenvalue	3.537	3.089	2.388	1.982	1.832	1.583	1.414	1.235	1.024
% of Var.	16.843	14.710	11.372	9.438	8.721	7.539	6.733	5.880	4.878
Cum. %	16.843	31.553	42.925	52.363	61.084	68.623	75.357	81.237	86.114
Value	**Factor 10**	**Factor 11**	**Factor 12**	**Factor 13**	**Factor 14**	**Factor 15**	**Factor 16**	**Factor 17**	**Factor 18**
Eigenvalue	0.728	0.657	0.487	0.463	0.221	0.207	0.076	0.056	0.020
% of Var.	3.467	3.130	2.319	2.206	1.052	0.985	0.364	0.265	0.093
Cum. %	89.581	92.711	95.030	97.237	98.289	99.274	99.637	99.902	99.996
Value	**Factor 19**	**Factor 20**	**Factor 21**						
Eigenvalue	0.001	0.000	0.000						
% of Var.	0.004	0.000	0.000						
Cum. %	100.000	100.000	100.000						

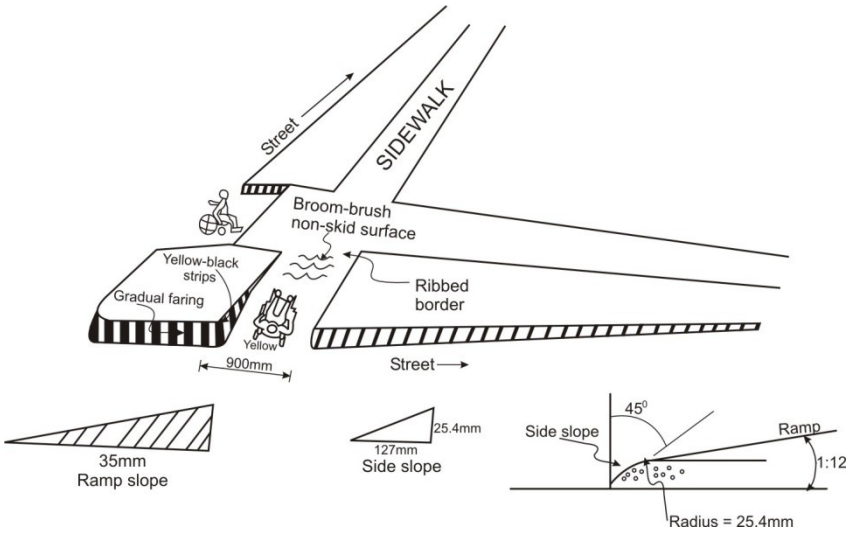

Figure 1: Wheelchair/monocoque Ramp Design in a Built-up Environment

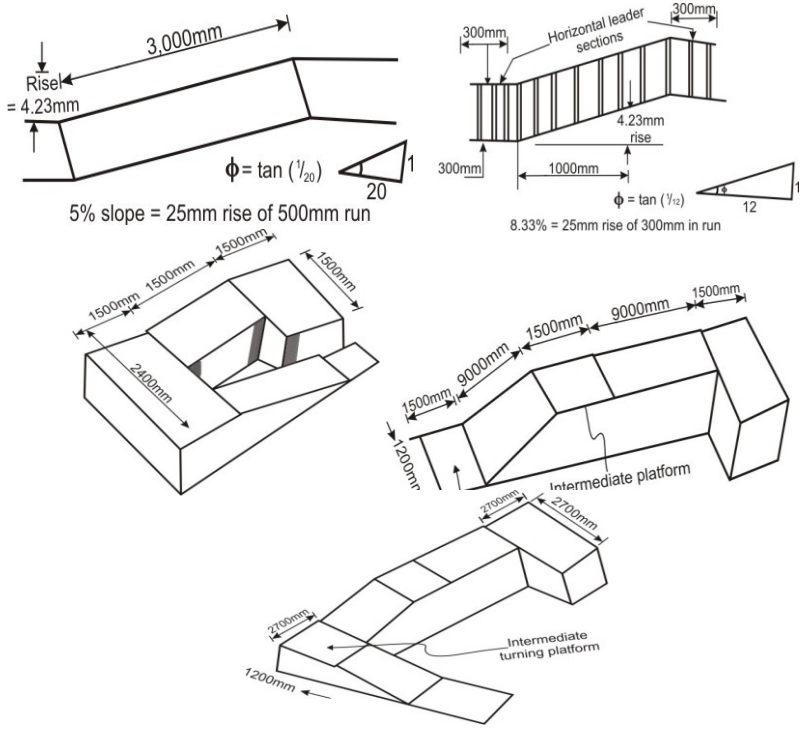

We note that eigenvalue of unity (λ=1) set the threshold for determining the candidacy of variables to be retained in the factor space. Figure 1 depicts standard design for public sidewalk (hallway) while figures 2a, 2b, 2c, 2d and 2e show standard ramp design specification for Monocoque users.

Moreover, the PCA analysis applied, loaded the variables under nine (9) factors by varimax rotation scheme. Interestingly, the application of latent root criteria and scree plot (shown in figure 3) suggested that the nine factors meet the requirements for factorability and interpretability.

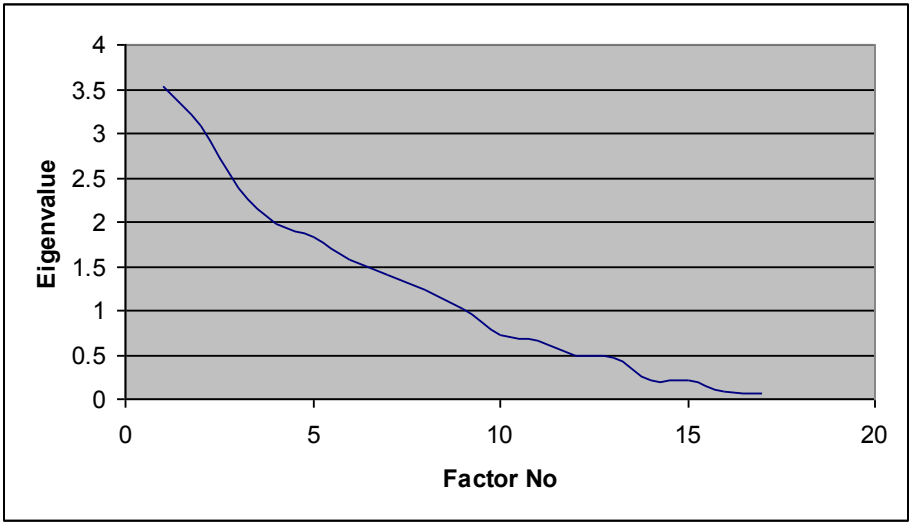

Figure 3: Scree Plot

The nine factors and their creative labels are depicted in Table 5.

Table 5: Factors Platoons

a) Cluster I (F_1): Accessibility Enhancers

Variable Number	Factor Loading	Variables
21	0.909	Power failure induced inoperability
15	0.861	Alternative power supply cost
10	-0.591	Monocoque as panacea to paraplegic challenges
11	0.576	Standard ramp design

This is a bipolar factor and the magnitude of factor loadings of variables is insightful to the significance of each variable. The higher the loading, the more, the influence of the

variable, on the factor. Accordingly, power failure is the most offensive variable followed by alternative power supply cost. The remaining two variables are middlings.

b) Cluster II (F_2): Inclusive Design Legislation

Variable Number	Factor Loading	Variables
2	-0.876	Usefulness of built environment
4	-0.673	Consequences of mobility limitations
7	-0.576	Effective legislation towards inclusive design

In this regime, the variables, all weild negative factor loadings suggesting nonexistence up-to-date. We are aware that Nigeria is yet to legislate on inclusive design in public buildings.

c) Cluster III (F_3): Mobility Difficulties

Variable Number	Factor Loading	Variables
17	0.827	Accessibility restriction impact
20	-0.733	Difficulties in hand rim propulsion
8	0.582	Unavailability of ramps

This is another bipolar factor stressing the need to pay greater attention to accessibility restriction by virtue of its meritorious factor loading (0.827). variable 20, reason of negative substantial loading, portrays the labour intensiveness of hand rim propulsion. The last factor, a middling, underscores the importance of standard ramps in built up environment.

d) Cluster IV (F_4): Utility of Mobility Aids

Variable Number	Factor Loading	Variables
5	-0.918	Usefulness of assistive technologies

Although nonexistent on account of the negative sign, the magnitude of the loading demonstrative of its importance.

d) Cluster V (F_5): User-friendliness of Systems

Variable Number	Factor Loading	Variables
18	-0.853	Accessibility of built up environment
13	-0.708	Wheelchair user-friendliness

The two notions (variables 18 and 13) weilding substantial negative loadings are yet to be realized. Our result suggests that ramps and walk ways should be developed first, then the proposed wheelchairs/monocoque would find relevance.

e) Cluster VI (F_6): Utility of Monocoque

Variable Number	Factor Loading	Variables
1	-0.934	Usefulness of monocoque

This result shows that, with the highest factor loading amongst the platoons, the proposed monocoque would engender inesteemable benefits to the paraplegics.

f) Cluster VII (F_7): Social Welfarism

Variable Number	Factor Loading	Variables
14	0.904	Dearth of ramps
19	0.496	Government lip services
9	0.435	Utility of electric wheelchair

Variable Number	Factor Loading	Variables
14	0.904	Dearth of ramps
19	0.496	Government lip services
9	0.435	Utility of electric wheelchair

This represents a sturdy factor unscoring the need to provide ramps in public buildings and walkways. The mediocre loadings on the rest variables suggest that, to some extent, government is insincere in dealing with the accessibility constraints.

g) Cluster VIII (F_8): Helpfulness of Inclusive Design

Variable Number	Factor Loading	Variables
16	0.831	Effectiveness of Ramp-handrails
6	0.661	Importance of inclusive design.

Ramp-handrail is meritoriously loaded under F_8 thereby showing its significance in the design of public buildings. The next variable, inclusive design, is moderately loaded thus indicating its level of importance in design considerations.

h) Cluster IX (F_9): Person-Centricity Design

Variable Number	Factor Loading	Variables
12	-0.760	Usefulness of anthropometric data.
3	-0.708	Standard ramp design.

These negative variables are substantially loaded under F_9. The factor illustrates that the ideal thing in design is to apply anthropometric data in the determination of ramp dimensions. In each of the nine platoons presented in the foregoing, it is evident that the scale items (variables) were depicted in the descending order of their factor loading. The magnitude of the factor loading represents the level of importance of the variables in relative terms.

3.1 Factor Interpretations and Policy Formulation

Our results have shown that clusters 1, 7 and 8, namely accessibility enhancers, social welfarism and helpfulness of inclusive design are of top priority. The loading under F_7 and F_8 are all positive and the absolute values are also substantial suggesting their relevance as policy elements. Factor 1 is a bi-polar factor because variable 10 has a negative factor loading of -0.591. The negative sign means that it varies inversely with the factor (accessibility enhanced facilities).

The monocoque is not yet in existence, and so the respondents felt that the more monocoques that are introduced to paraplegics, the lesser their challenges, and the challenges are the inaccessibility of facilities. Under the same Factor 1, the PCA model trumped power failure as the most offensive variable that makes systems not to work; this suggest that policy makers should give greater emphasis to scale item number 21.

Variable 15, alternative power supply cost is substantially loaded under F_1 thereby suggesting that it is a key issue especially when public power supply system fails. The import is that, like in developed countries, the proposed monocoque will work better if power is always available to operate lifts. Monocoque or wheelchair can easily take paraplegics to various floors of high rise buildings. The wheelchair or Monocoque can then take the paraplegic to the point of service provision on the floor in question. The last variable under F_1 is a middling, i.e. standard ramp design. It suggests that when ramp is designed and constructed in line with international standard, it lends itself to user-friendliness in accessing high rise buildings.

Under factor 7, social welfarism, the respondents are in complete agreement that there is dearth of ramps in public buildings in Nigeria. It is a reflection of Government's lack of empathy for the paraplegics (variable 19). They pay lip service only, but there is no action oriented programmes to address their plight. Loading on variable 9, utility of electric wheelchair is a mediocre because the variable wields a factor loading of 0.435. The respondents felt that introduction of wheelchair whose operation will use electricity would be a futile venture probably because power might not be readily available. It is therefore a poor policy element. The next important factor platoon is F_8 (Helpfulness of inclusive design). Variable 16 (effectiveness of ramp handrail) has a meritorious loading of 0.831 while variable 6 (importance of inclusive design) has a substantial loading thus stressing that it is necessary to adopt inclusive design in built-up environment.

The next groups of clusters are:F_2 : Inclusive design regulations,F_4: Utility of assistive aids,F_5: User-friendliness of systems,F_6: Utility of Monocoque,F_9: Person-centricity Design

All variables under these factors wield negative factor loadings.

The foregoing factors are orthogonal and therefore are independent of one another. The signs only bear meaning on the factor they are loaded. The magnitude, as well as the sign of the loadings bears significance. The higher the magnitude of loading, the more the influence of the variable loaded. The negative signs signify that all the attributes described by the variables are futuristic in terms of realization; they are yet to take effect. The respondents feel that when effective, the degree of influence would be reflective of the magnitude of their factor loadings.

4 CONCLUSION

The survey approach adopted was effective in articulating the factors that are relevant to addressing the mobility demands of paraplegics. Moreover the PCA model employed enable us to achieve parsimony in data reduction. The twenty one variables identified were factorized under nine main factors. In this regard, it is easier for policy makers to hatch plans resolving around these nine platoons instead of having to deal with the twenty separate variables. Concerning the structure of the variables, there are clearly nine (9) separate and distinct dimensions (clusters) for evaluating the challenges paraplegics in Nigeria face in having access to built-up environment. Designers of Hallways, walkways and sidewalks in Nigeria may thus adopt the designs in order to improve the perceived accessibility hindrances in built-up environment.

It is evident from our results that four variables weild meritorious factor loadings. These comprise: power failure, utility of mobility aids, usefulness of monocoque and dearth of

ramps. These variables are critical to solving the mobility problems of the paraplegics in Nigeria.

PCA applied has also provided the basis for data reduction or clustering through varimax rotation. Perhaps it should be noted that there are complex inter-relationships represented in the factor matrix (Table 2),and their interpretation is subtle.

Taken together, it is the view of the authors that if power supply can be readily available in taking wheelchairs and Monocoque to points of service provision, majority of them will be involved in entrepreneurial training that will make life more meaningful to them on one part and also increase the gross domestic product (GDP) of the nation on the other hand. At present, cost of operation of standby generator to operate lift is outrageously high due to high cost of diesel (N100 per litre). It is also believed that assistive technology would be beneficial but Nigeria lack the necessary infrastructure for these now. The study strongly recommends the use of the proposed Monocoque (the highest factor loadings). There is consensus that the need for provision of ramps in public buildings has not received serious attention from Government. A model design has been developed as guide to planners.

5 REFERENCES

Allen, JL (2004). Beyond functionality – the importance of product sematics in the design of assistive devices, in Designing a more inclusive world, Springer, London, UK.

Barber, J. (1996). The design of disability products: a psychological perspective. British Journal of Occupational Therapy, Vol. 59, (12) pp. 561-564.

Bennington, J, Mitchell, J, Chester, R., McClenahan, J. and Ramsden, J. (2003). To, From and between the leaves: Systematic, evidence-based autonomy, choice and innovation. Paper presented at Include 2003, Royal College of Art, London, UK, 26 March.

Browning, D.R., Trimble, J., Song, S –m, Priemer, R and Zhang, C. D. (1996). Legged mobility, a wheelchair alternative. Published in University of Illinois at Chicago, http://www.evl.uic.edu/drew/leggs.htm

Cassim, J. (2003a). Design Innovation for Mainstream Markets Through 'Critical' User Involvement: the DBA Design Challenges. Paper Presented at Include 2003, Royal College of Art, London, UK 28 March.

Cassim, J. (2003b). Smart Wearables: a new frontier for Inclusive design innovation. Paper presented at Include 2003, Royal College of Art, London, UK, 28 March.

Close, J. (2001). Enabling Engineering I. D. [USA], Vol. 48, No. 1, pp. 43 February.

Fields, B. (2003). Bridging Usability and Aesthetic Design of Wheelchairs. Usability Special Interest Group Newsletter, Vol. 9, No. 4, April.

Gheerawo, RR and Cassim, J (2003). Education and practice of inclusive design at student level. Paper presented at Include 2003, Royal College of Art, London, UK 26 March.

Hamzat, T.K., Dada, O.O. (2005). Wheelchair Accessibility of Public Buildings in Ibadan Nigeria. Asia Pacific Disability Rehabilitation Journal, Vol. 16, pp. 115-124.

Keates, S and Clarkson, P.J. (2002). Defining Design Exclusion, in Universal Access and Assistive Technology, Springer, London, UK, pp. 13-22.

Newell, A. (2003). Inclusive Design or Assistive Technology in Inclusive Design: Design for the whole population, Springer London, UK, pp. 172 – 181.

Odufuwa, B.O. (2006) Enhancing Mobility of the Elderly in sub-Saharan African Cities through Improved Public Transportation. Journal of International Association of Traffic and Safety Sciences. IATSS – JAPAN Vol. 30 (1) pp. 60-66.

Odufuwa, B.O. (2007). Towards Sustainable Public Transportation for Disabled People in Nigeria Cities. Stud. Home Comm. Sci. Vol. 1 (2) pp. 93-101.

Pockney, R (1999). Quoting Pockney, R.: Achieving Better Equipment Fit for Occupational Therapy Clients. Paper Presented at the College of Occupational Therapy 23rd Annual Conference, Liverpool, UK.

Pockney, R. (2003). Research and Occupational Therapist at the Health and Rehabilitation Research Unit, University of Southampton (Personal Communication 16 September 2003).

Porter, A. (2002) Compromise and Constraint: Examining the Nature of Transport Disability in the Context of Local Travel. World Transport Policy and Practice, Vol. 8, (2) pp. 9-16.

Porter, L. (2003). Chairs, Wheels and - - - Style? MA Dissertation, Royal College of Art, London, UK.

Pyke, T., Sofo, C.A. and Ali-Akpakiak (2003). Measuring Poverty in Nigeria, London: Oxfam.

Thomas, L. (2001). Disability is not so Beautiful: A Semiotic Analysis of Advertisement for Rehabilitation Goods. Disability Studies Quarterly (Centre on Disability Studies, Hawaii), Vol. 21, No. 2, pp.7.

Woodson, W.E., Tillman, B. and Tillman, P. (1992). Human Factors Design Handbook. Information and Guides for the Design of Systems, Facilities, Equipments and Products for Human Use. McGraw-Hill, Inc. New York.