

Vol. 2 No. 4 (2024)

INTERNATIONAL JOURNAL OF INDUSTRIAL AND PRODUCTION ENGINEERING (IJIPE)

JOURNAL HOMEPAGE: https://journals.unizik.edu.ng/index.php/ijipe/

Linear to Circular Economy Innovation in the Automotive Industry

[1]Osasona A.P., [2] Oginni O. T., [3]Olorunfemi B. J. and [4]Adekunle A.A

[1]Project Management and Design Department, Nigeria Police Force Property Development and Construction Company, Lagos Street, Garik II, Abuja, Nigeria

[2]Mechanical Engineering Department, School of Engineering Technology, Bamidele Olumilua University of Education, Science and Technology Ikere, Nigeria.

[3]Mechanical Engineering Department, Faculty of Engineering, Federal University Oye-Ekiti, Nigeria.

[4]Mechatronic Engineering Department, Faculty of Engineering, Federal University Oye Ekiti, Nigeria.

Corresponding Author: oginni.olarewaju@bouesti.edu.ng/ +2348066872173

Abstract

The automotive industry is crucial globally, but its increased use of fossil fuels poses environmental challenges. Linear economy vehicles emit more greenhouse gases, while circular economy aims to reduce pollution by redesigning processes and products. This paper explores the construction of an electric vehicle from an existing internal combustion engine, utilizing mechanics principles and fundamental engineering equations from mechanical and electrical analysis. The Toyota Starlet car was converted into an electric vehicle (EV) using four absorbed glass mat (AGM) lead acid batteries and a 48V direct current (DC) motor, with a 48V, 500Amps insulated-gate bipolar transistor (IGBT) electronic DC controller and a total capacity of 28.8KWh. It connects via a 5mm mild steel adapter plate and includes an electric booster vacuum pump. The donor vehicle's steering and suspension systems were reused, along with various components like a 48V electric motor controller, charger, brake assist system, coupler, adapter plate, and electronic foot pedal. A 48V DC motor series wound was used, providing torque ranging from 102Nm to 115.8Nm for the EV's wheel. The test resulted in an electric vehicle reaching a maximum speed range of 56-65KWh. Electric vehicles (EVs) offer simplicity, control, and cleanliness, potentially saving internal combustion engine (ICE) vehicles from extinction or scrapping and preventing global warming. The framework of this circular economy provides a solution for change across the lifecycle of a vehicle, providing the automotive industry a path towards a robust sustainable transportation solution.

Keywords: Automotive industry, electric vehicle, ICE, linear and circular economy innovation

1. Introduction

Interest in electric cars began in the 1970s due to global climate concerns and rising petroleum costs. Scientists and engineers have worked hard to improve electric vehicle production, with countries setting deadlines for fuel-less vehicles (Ananchai, 2018; Abhisek *et al.*, 2019). Sustainable development goals (SDG) nine and thirteen addressed industry, innovation, and infrastructure, as well as urgent action against climate change, adopted by the United Nations General Assembly in 2015. The automotive industry transitioned from a linear to a circular

economy, aligning with SDG goals to reduce environmental pollution and natural depletion through purposeful product redesign (Habib *et al*., 2015; Arun, 2020; Adee *et al*., 2020). A circular economy model aims to bridge the gap between production and natural ecosystem cycles, while electric cars, including hybrid-electric, plug-in hybrid, battery, and extended-range vehicles, use electric motors for propulsion. Electric cars, including trains, trucks, airplanes, boats, and spacecraft, use rechargeable batteries instead of traditional ICE engines. They differ from hybrid cars, which use gasoline. EVs are rechargeable by household electricity (Ashishi and Rahri, 2016; Alessadro *et al.*, 2018).
The International Energy Agency predicts that electric car sales would increase by an average of 23% per year from 2024 to 2030 to reach 65% of total car sales by 2030 (Nogueira et al., 2022). While electric vehicles are only as green as their electricity source, they generate fewer emissions, are more efficient, and have fewer movable parts, reducing maintenance costs. Electric vehicle production has advanced over the past decade, with studies examining their impact on productivity, efficiency, and grid capacity (Awash, 2014; IEA, 2018). Past studies examined the impact of charging methods on electric vehicles, analyzing their environmental impacts and enhancing their power flow model (Amir and Dikki, 2015). A study on self-charging vehicles using solid software evaluated battery electric vehicle powertrain performance, energy consumption, and thermal capability, resulting in effective, positive output, economic efficiency, and environmental friendliness (Emma-Arfa, 2016; Sabri and Resal, 2021).

A linear economy takes raw natural resources, transforms them into products, and gets rid of them. The linear economy vehicles emit greenhouse gases, degrade natural resources, and exacerbate climate changes. While the circular economy model aims to close the gap between the production and the natural ecosystems cycles so as to prevent ICE vehicles from becoming scraps (Johanson and Henriksson, 2020). The circular economy vehicles reduce environmental pollution and natural resources depletion by redesigning processes and products on purpose. Circular economy strategies in the automotive industry help to conserve natural resources, reduce waste, redesign for durability, recycle materials, lower costs, ensure quality, lower carbon emissions, and improve resources more efficiently (Korhonen et al., 2018).

The transition from a linear economy is imminent because petrol and diesel are major sources of energy in linear economy vehicles, which are depleting at the moment owing to over usage by conventional vehicles (Martins et al., 2021). Besides, fossil fuels cause heavy damage to the environment by emitting harmful gases, and the cost of these fuels is very high. Therefore, many countries and the major automotive manufacturers are already transitioning to circular economy vehicles that are safer for the environment (Mohammad et al., 2020).

The importance of a circular economy includes (Dixit, 2020)

i. Materials are recycled at continuous high value.
ii. Energy utilized is from renewable sources.
iii. Biodiversity supported and enhanced through human activities
iv. Human society and culture are preserved.
v. Health and well-being of humans and other species are structurally supported.

A 12V, 75Ah battery is connected to a 12V, 65A DC series motor using a 16 square mm single-core copper wire, sustaining heavy loads. (Amir *et al.*, 2016; Sriniavasa and Suydharshau, 2017; Seong *et al*., 2016) assessed the efficiency of an electric vehicle system in various road conditions using vehicle dynamics calculations, revealing a significant economic innovation. Chauhan (2015)

highlights vehicle technologies promising automotive solutions and predicts 25% of cars to run on electricity by 2025. Motor torque is crucial for speed, acceleration, and performance. The linear flow of materials and energy is not feasible to maintain if automotive industries are meant to be sustainable. The present study simplifies motor capacity calculations for specific vehicle specifications and investigates the correlation between circular economy innovation in the automotive industry.

2. Materials and Methods

This study focuses on designing and calculating the mechanical, electrical, and battery capacity of an electric vehicle using fundamental engineering principles, analyzing vehicle features like mass, acceleration, velocity, drag coefficient, and four forces (Emma-Arfa, 2016). Forces acting on a vehicle in motion on an inclined plane are shown in Figure 1, coupled with sequential analysis.

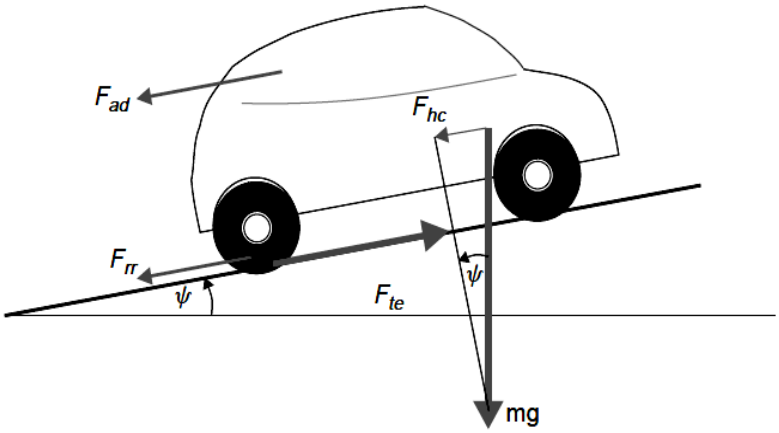

Figure 1. Forces acting on a Vehicle on Motion (Martins et al., 2021)

2.1 Rolling resistance force

Rolling resistance is the opposing force a car must overcome due to rolling motion between wheels and the vehicle surface, influenced by tire material and surface roughness as stated in equation 1. The vehicle's power consumption in overcoming the rolling resistance load is contained in (2). Aerodynamic force is the force resulting from vehicle speed's aerodynamic pressure, influenced by surface shape (A), coefficient of form (C_d), velocity (v), and air density (ρ) as stated in equation 3 (Satyendra-Kuma and Revankar, 2017; Erika, 2021)

$$.F_{rr} = \text{mg}\ \mu_{rr} \quad (1)$$

$$P_{rr} = F_{rr}.\text{V} \quad (2)$$

$$P_{aero} = \frac{1}{2}\rho \text{A} C_d V^3 \quad (3)$$

The typical vehicle's C_d value ranges from 0.18 for a streamlined body to 0.25-0.30 for shearing forces. Frontal surface area A is considered for boxy car shapes. Increased speed increases aerodynamic drag. Gradient/hill climbing force and grade resistance are both gravitational forces that pull vehicles back when climbing an inclined surface. Acceleration force is the force that increases a vehicle's speed from rest, influenced by motor torque and Newton's second law of motion, affecting vehicle mass, as stated in equations 4 and 5. The vehicle's angular speed

necessitates angular acceleration, with the angular acceleration force being the force required by the car wheels to achieve this acceleration as contained in (6) (Mohammad et al., 2020).

$$F_{hc} = \text{mg} \sin\theta \quad (4)$$

$$F_{la} = \text{ma} \quad (5)$$

$$F_{wa} = \frac{IG^2}{r^2}a \quad (6)$$

The total tractive efforts, which include rolling resistance force, aerodynamic force, hill climbing force, linear acceleration force, and angular acceleration force, are the total force needed to move a vehicle. The estimated energy required to determine the battery capacity for an electric car or vehicle is calculated as contained in equations 7 and 8 (Dixit, 2020).

$$F_{te} = F_{rr} + F_{ad} + F_{hc} + F_{la} + F_{wa} \quad (7)$$

$$P_{te} = F_{te}\text{V} \quad (8)$$

The torque produced by the driving motor significantly influences the speed, acceleration, and performance of an electric vehicle and is calculated based on the wheel's torque requirement. Driving Torque refers to the rotational equivalent of linear force, or moment of a force, which is the force the drive shaft is stated in equation 9. Torque is obtained by mounting a motor with the torque value on the vehicle's differential or using a gearbox or chain drive to magnify a lesser torque of equation 10 as depicted in Figure 2 (Seong *et al.*, 2016).

$$\tau = R_f F_{te} r_{wheel} \quad (9)$$

$$\tau_t = \frac{R_w F_{te}}{\eta K_g} \quad (10)$$

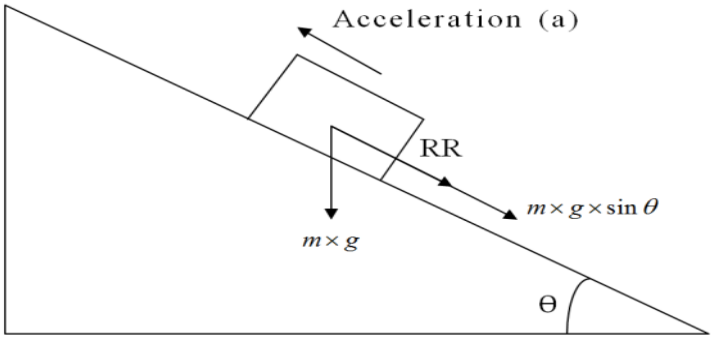

Fig. 2: Free Body Diagram of a vehicle moving up an inclined surface (Saurabh Chauhan, 2015)

The calculation of required torque necessitates the determination of the maximum torque that can be transmitted through the wheels in equation 11 (Saurabh Chauhan, 2015).

$$\tau_{\max} = \frac{(f_\mu \times mg \times f \times r_{\text{wheel}})}{2} \quad (11)$$

Where f_μ is coefficient of static friction, fraction of the total weight acting on rear of the vehicle (f), rolling resistance coefficient (μ_{rr}) and Gross weight of the vehicle (mg), moment of inertia (I), gear ratio (G), radius of the Tyre (r), torque (τ), friction factor that account for frictional losses

between bearings axles (R_f), radius of drive wheel (r_{wheel}), and total tractive force (F_{te}), respectively.

2.2 Mechanical Design: The vehicle has a curb weight of 810 kg, a length of 2.95 m, a height of 1.36 m, a width of 1.45 m, a cross-sectional area of 1.972 m², and a battery weight of 176 kg. The total weight removed from the Toyota Starlet car includes the ICE, exhaust pipe, fuel tank, and cables, resulting in a total of 72 kg. The total weight added to the system is 190.1 kg, including the AGM batteries, DC motor, controller, on-board charger, battery housing, adapter plate, brake assist, and others. The new weight of the electric car is 928.1 kg, calculated by dividing the curb weight of the starlet car by the total weight added and removed.

2.2.1 Vehicle Parameters: The vehicle weighs 928.1 kg, has a cross-sectional area of 1.97 m², a wheel radius of 0.21 m, a fixed gear of 4:1, 80% transmission, a DC motor speed of 2500-3000 rpm, and is rated for a longitudinal velocity of 0-10 seconds. The vehicle's velocity (V_{veh}) is 16.5 m/s with an acceleration of 1.65 m/s² at 59.4 km/hr and 13.75 m/s at 2500 rpm with an acceleration of 1.375 m/s². (Seong *et al.*, 2016).

2.2.2 Vehicle Dynamics: The total tractive force of a car is calculated by combining forces such as gravity, aerodynamic, rolling resistance force, inertial force, and gradient force as explained.

i. The rolling resistance force, calculated as the resistive force between tires and the road surface, is 136.6 N when the vehicle's weight is 928.1 kg.
ii. The aerodynamic force, calculated using air friction and pressure forces, is 84.5 N, based on the vehicle's body surface area and velocity.
iii. The gradient/hill climbing force, calculated as the resistive gravity force associated with climbing a grade, is zero when the car moves on a plain surface.
iv. Acceleration Force of 1276.1N is the force required to increase a car's speed, overcoming its inertial mass.
v. Total Tractive Force of the Vehicle: The vehicle must overcome a total tractive force of 1497.2N.
vi. The vehicle's starting force was 1276.1N, and at 3000rpm, its total force at top speed is 258.3N.
vii. The transmission power, which includes 98.25 Nm torque and driving torque, is a mechanical linkage between the electric motor shaft and the wheel, resulting in an overall transmission power of 20.6 kW.

The calculation for the battery power required for an electric vehicle, considering 80% drivetrain efficiency, is 25.75 kW, with auxiliary loads and passengers contributing to the required 26 kW and 30 kW power.

2.3 Electrical Design

Battery components are crucial in electrical design, with LiFePo4 being ideal due to its lightweight and high energy density. However, they are expensive and not readily available locally. Lithium-ion batteries offer 2000+ cycle life, making Absorbent Glass Mat (AGM) Lead Acid Battery suitable for local use. The design uses a 48VDC motor with torque ranges of 102Nm to 115.8Nm, with other electrical components chosen based on 48V capacity.

2.4 Battery Capacity

The design uses a motor controller with a 48V, 500-amp battery charger, a battery traction power of 28.8 kWh, and 12-volt lead-acid auxiliary batteries for additional accessories.

2.4.1 Battery Range: The battery has a range of 1276.1N and can cover 36.4 km before recharge, with a charging time of 6 hours.

2.5 Construction of the Electric Vehicle

The construction of a DC series-wound electric motor began with a manual third-generation Toyota Starlet Car, allowing easy adaptation with an electric motor. The vehicle features a 5.5 kW series-wound DC motor, four absorbent glass mat lead-acid batteries, and an electronic DC motor controller. The donor car's chassis, suspension, and steering systems are reused, along with an on-board charger, brake assist system, and battery racks. The systems consist of an on-board charger, a brake assist system, a coupler, an adapter plate, a DC/DC converter, a contactor, an electronic foot pedal, a fuse, copper cables, a charging socket, a port, and battery racks. The car's manual transmission was removed, and the gearbox shaft was measured to determine the coupler diameter. A 5mm carbon steel plate was used to fasten the adapter plate to the transmission's bell housing as shown pictorially in Figures 3 to 8. An electric controller controls the DC motor, receiving signals from batteries and delivering power through an electronic pedal, replacing the manual one. Two 18 by 25-inch battery racks were installed at the front and rear of the car to accommodate 12V, 150Ah Absorbent Glass Mat Lead Acid Batteries. The transmission system is connected using a 5mm mild steel adapter plate. An electric booster vacuum pump and cylinder are installed. The controller circuit, potentiometer, contactor, and fuse are installed. The battery was charged using an on-charger, brake booster vacuum pump, and cylinder, with components like contactors, battery gauge, 250-amp contactor, and 500-amp fuse fixed for proper functioning. On-road testing is conducted at Fuoye's Ikole-Ekiti Campus in Nigeria.

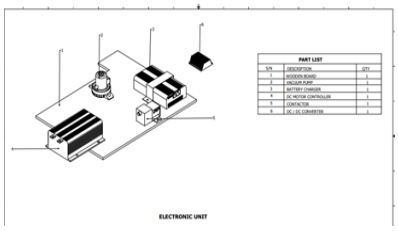

Fig. 3: Detailed View of Electronic Unit

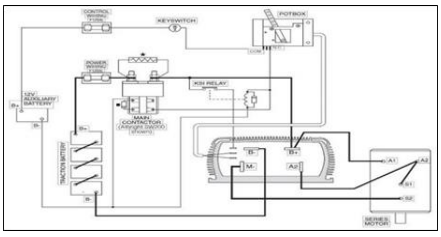

Fig. 4: Electric Car Wiring Schematics



Fig. 5: ICE removed from Toyota Starlet Car



Fig. 6: Coupling of transmission of the donor car



Fig. 7: Connection of electronics device



Fig.8: Starlet electric vehicle

3. Result and Discussion

Table 1 presents a comparison of the results between the gasoline and electric-powered vehicles in terms of carbon dioxide emissions, efficiency, distance covered, and charging time on testing. The electric vehicle has zero emissions, high efficiency, and ran for six hours successfully without energy consumption. This makes it more advantageous and preferable over gasoline. The electric car, powered by a 48V DC motor and 28.8KWh capacity absorbent glass mat lead acid batteries, underwent on-road testing. Tables 2 and 3 present test results for distance covered, speed in km/h, battery level in voltage, and time stamp in minutes. It is observed that the more distance covered by EVs, the less the battery level depreciates, but it can be improved by selecting a charger with a higher amperes rating. The cost of fueling and maintaining a gasoline vehicle is more than that of an electric-powered vehicle, as shown in Table 4, making it economical.

Table 1: Results of Testing Parameters between Gasoline and Electric powered vehicles

Parameter	Gasoline vehicle	Electric vehicle
Efficiency of the Vehicles	Less than 20%	80% more
Carbon dioxide emission	157g/km	Zero
Distance cover for full charge	Tank capacity determines	36.4km
Charging time	Based on the volume of litres	6hrs

Table 2: Day I drive test outcome

Time (min)	Distance (m)	Speed (km/h)	Rpm	Battery level (v)
1	0	0	0	53.45
2	262.8	8.76	1858	53. 17
3	620	12.40	2631	52.72
4	962	14.44	3065	52.31
5	1250	15.00	3185	51.95
6	1472	14.72	3124	51.58
7	1750	15.08	3201	51.16
8	2003	15.02	3189	50.68
9	2134.5	14.23	3021	50.25
10	0	0	0	50.06

Table 3: Day II drive test outcome

Time (min)	Distance (m)	Rpm	Speed (km/h)	Battery level (v)
1	0	0	0	53.43
2	401	2558	12.05	53. 12
3	1091	4631	21.82	52.86
4	1748	5565	26.22	52.61
5	2430	6189	29.16	51.39
6	2933	6224	29.33	51.15
7	3519	6401	30.16	50.90
8	3913	6229	29.35	50.75
9	4145	5865	27.63	50.53
10	0	0	0	50.39

Table 4: Costs of operation of the electric vehicle and ICE

S/n	Parameter	Gasoline vehicle	Electric vehicle
1.	Carbon dioxide emission	160g/km	Negligible
2.	Cost of mileage [Fuel price (#165) & electricity at #36.6/KWh]	#2,805 per100km	#1,386 per100km
3.	Cost of maintenance over 5 year and distance of 10000km	#2,172,500	#1,073,100
4.	Total distance cover for full charge	Tank capacity	36.4km
5.	Charging time	volume (litres)	6 hours,

Figure 9 illustrates the relationship between time, distance, speed, and battery level, showing that as distance and speed increase, the battery level depreciates. Figure 10 illustrates the relationship between speed, distance, and battery level, showing that an increase in speed leads to a decrease in distance covered. An increase in distance covered leads to a reduction in battery level as illustrated in Figure 10. It therefore requires a power source of charging prior to the predicted usage and battery lifetime.

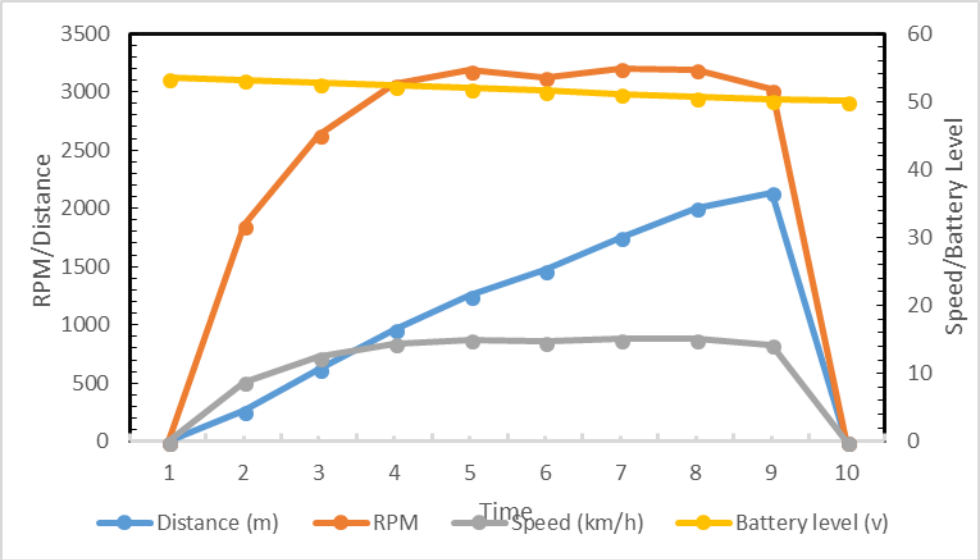

Fig. 9: Time against Speed (rpm, km/h) and Battery level for day I drive test

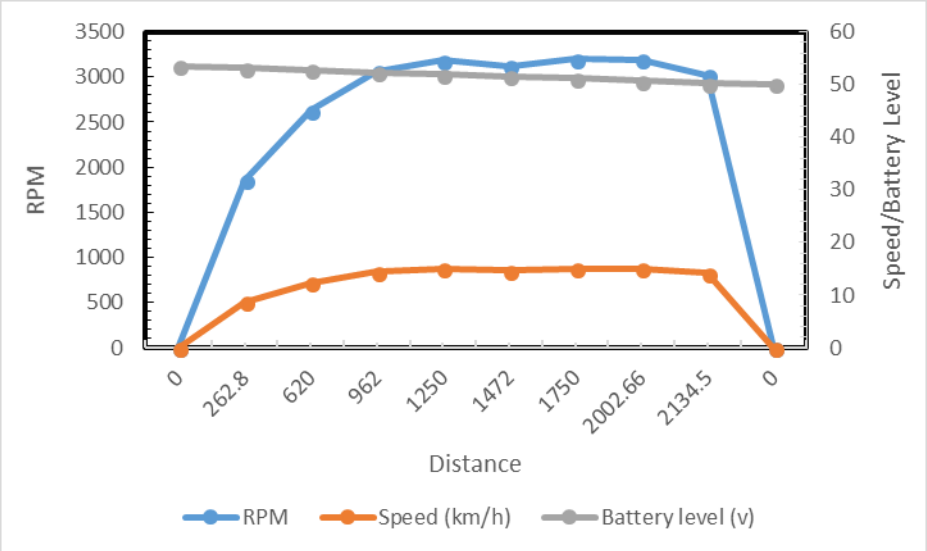

Fig. 10: Distance against Speed and Battery level for day II drive test

The application of circularity reflected through the implementation of four main strategies, namely reuse, repair, remanufacture, and recycle, allows both extending the product's life and closing the loop of material use. Therefore, a circular economy is an alternative solution to achieve sustainability through effective use of resources and waste management.

4. Conclusion

This paper constructs an electric vehicle from an existing gasoline engine, using mechanics principles and engineering equations from mechanical and electrical analysis. The study reveals an electric car with a transverse front-wheel-drive system, powered by absorbent glass mat lead-acid batteries, with a 28.8 kWh capacity. The design of electric vehicles (EVs) is simple, controllable, and cleaner, ensuring easy integration of new members. This cleaner, more efficient transportation option could save internal combustion engine vehicles from extinction or scrap and

prevent global warming. The work showed a decrease in greenhouse gas emissions, particularly from automobiles, and serves as a guide for stakeholders in the automotive industry. The sustainable development goal nine on industry, innovation, and infrastructure was achieved by building an electric vehicle from an internal combustion engine.

References

Abhisek, K., Bim, P.S., Daniel, T., Subbarna, B., Sudip, P. and Bivek, B. (2019**).** Parameters matching for electric vehicle conversion. *Transportation Electrification*, 12, 34-42.

Adeel, S., Liu, N., Junjie, H., Iqbal, A., Hayyat, M. A. and Mateen, M. (2020). Modeling of an electric vehicle for tractive force calculation along with factors affecting the total tractive power and energy demand. *Energies*, 34, 202-210.

Alessandro, S., Giorgio, P., Matteo, D. and Carlo, C. (2018). Electric-vehicle power converter model-based design-for-reliability. *Transactions on Power Electronics and Applications*, 3(2), 102 – 110.

Amir, A. and Dikki D.B. (2015). Propulsion system design and sizing of an electric vehicle. *International Journal of Electronics and Electrical Engineering*, 3(1), 102-110.

Amir, G., Hammadi, M., Choley, J., Soriano, T., Abbes, M. and Haddas, M. (2016). Electric vehicle design, modeling and optimization. *Journal of Mechanics and Industry*, 17, 40-55. doi: 10.1051/Meca/2015095.

Ananchai, U. (2018). Model based system design for electric vehicle conversion. *Technology*, 62, 76-82

Arun, K. M. (2020). Design and fabrication of a prototype electric vehicle. *International Journal of Technology*, 12(1), 29-33.

Ashish, A.N. and Rashmi, G.K. (2016). Design and development of electric vehicle battery charging using MIMO boost converter. *International Conference on Green Engineering and Technologies* (IC- GET) Nov, 2016 Coimbatore, India.

Dixit, M. (2020). Impact of optimal integration of renewable energy sources and electric vehicles in practical distribution feeder with uncertain load demand. *International Transportation Electric Energy System*, 30(12), 65-72.

Emma-Arfa, G. (2016). Design and assessment of battery electric vehicle powertrain, with respect to performance, energy consumption and electric motor thermal capability. Thesis for the Degree of Doctor of Philosophy, Department of Energy and Environment, Division of Electric Power Engineering, Chalmers University of Technology, Goteborg, Sweden.

Erika, P., Valentina, C., Thomas, V. and Marco, S. (2021). Adopting a conversion design approach to maximize the energy density of battery packs in electric vehicles. *Journals of Energies,*14(7), 1-24

Habib, S., Mohammad, K. and Umar, R. (2015**).** Impact analysis of vehicle-to-grid technology and charging strategies of electric vehicles on distribution networks – A review. *Journal of Power Sources*, 277, 205 – 214.

International Energy Agency, (2018). Clean energy ministerial and electric vehicle initiative. *IEA*, 14, 45-54.

Johanson, N. and HeNriksson, M. (2020). Circular economy running in circles: A discourse analysis of shifts in ideas of circularity in Swedish environmental policy. *Sustainable production and consumption,* 23, 148-156.

Korhonen, J., Honkasalo, A. and Seppilli, J. (2018). Circular economy: The concept and its limitations. *Ecological economics*, 143, 37-46

Martins, A.V., Godina, R., Azevedo, S.G. and Carvalho, H. (2021). Towards the development of a model for circularity: The circular car as a case study. *Sustainable energy technologies and assessments,* 45, 101215. Doi: 10. 1016j.seta.2021.101215.

Mohammad, A., Zamora, R. and Lie, T.T. (2020). Integration of electric vehicles in the distribution network: A review of PV based electric vehicle modelling. *Energies,* 13(17), 41-45

Nogueira, T., Sousa, E., Alves, G.R. (2022). Electric vehicles growth until 2030: Impact on the distribution network power. The 8th International Conference on energy and environmental research, ICEER 2021, 13-17

Satyendra, M. K. and Shuoad, T. R. (2019). Development scheme and key-Technology of an electric vehicle: An overview. *Renewable and sustainable Energy Reviews,* 70(c), 1266 – 1285.

Saurabh, C. (2015). Motor torque calculations for electric vehicle. *International Journal of Science and Technology Research,* 4(8), 63-71.

Seong, H.P., Jeong, J.L. and Young, L. (2016). Development of electric vehicle powertrain: experimental implementation and performance assessment. Eighteenth International Middle East Power Systems Conference (MEPCON). Cairo, Egypt.

Srinivasa, K. J. and Sudharshan, V. (2017). Design and fabrication of self-charging electric vehicle. *International Journal of Innovative Research in Science, Engineering and Technology*, 6(9), 18024- 18032.